REVAi
parts catalogue

- reva standard
- reva A/C
- reva classe

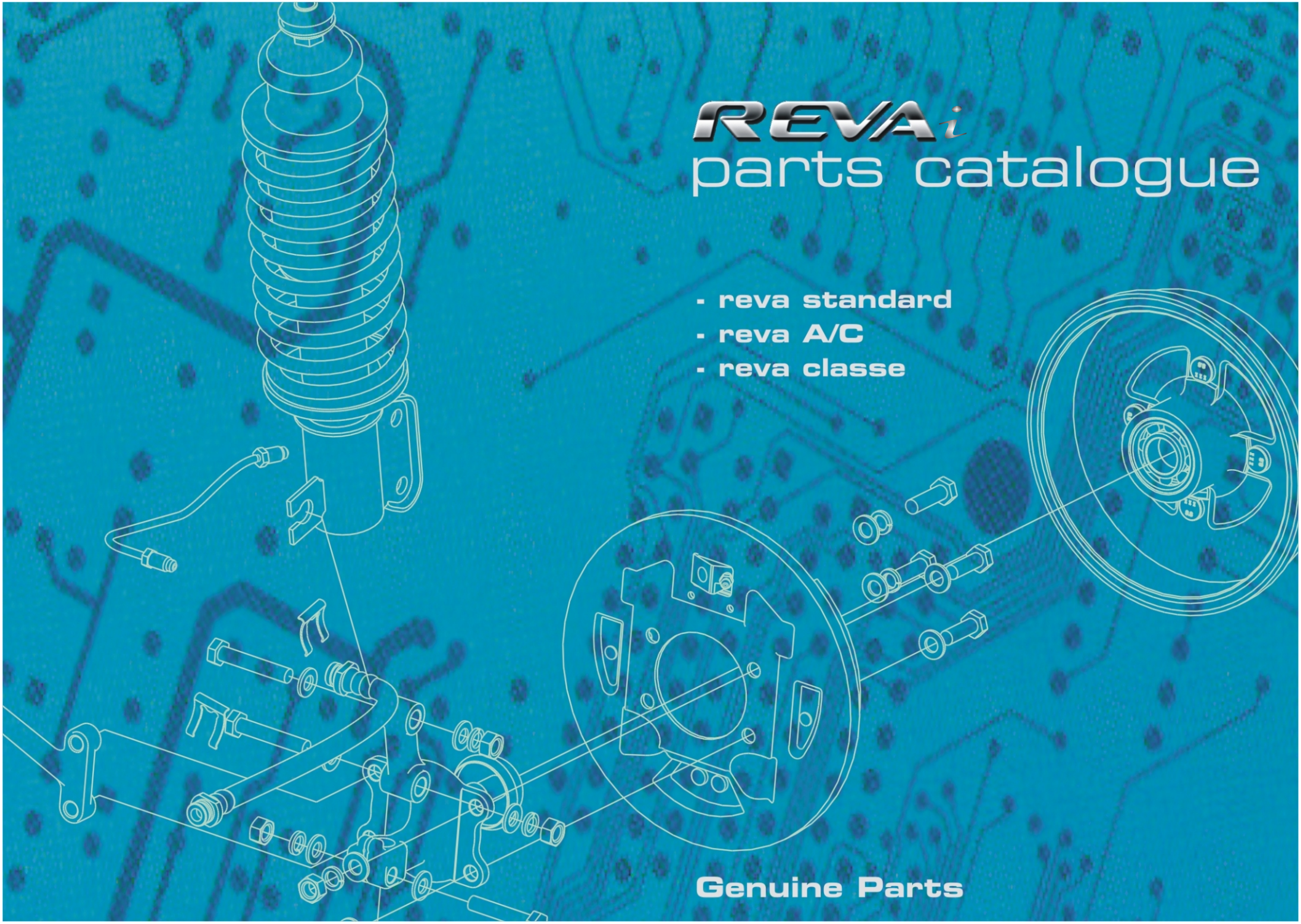

Genuine Parts

ISSUED TO :

DEALER NAME - ……

ADDRESS - ……

……...

……...

LOCATION - ……

DATE - ……

Copy No. - PC……...…….

Revision No. 1 - ……..

INTRODUCTION

This parts catalogue provides information about the serviceable parts for the "REVA i" STANDARD, A/C & CLASSE.

When it becomes necessary to replace parts on REVA vehicles, always use REVA GENUINE PARTS (which have passed a strict inspection, which guarantees quality and performance).

All data and specification contained in this publication are based on the latest product information available at the time of printing.

In order to make the best use of this parts catalogue; please be sure to read the "GENERAL INFORMATION" carefully.

Special tools are not listed in this catalogue. For information on special tools, please refer to the Service Manual or special tools Manual. (Special tools are supplied through norm al service parts, supply route).

CONTENTS

GENERAL INFORMATION

I. Explanation of catalogue composition
II. Abbreviations
III. Option code table
IV. Color table
V. Reva parts numbering system.

INDEX

PART NUMBER INDEX

PART NAME INDEX

GROUP NUMBER INDEX

ILLUSTRATION INDEX

ILLUSTRATION AND TEXT

1) Chassis
2) Body And Exterior
3) Interior
4) Electrical and Electronics
5) Heater And Air Conditioning
6) Accessories

(1) 3.20 (2) SEAT AND SEAT BELT ASSY

DESCRIPTION					REMARKS
KEY NO	PART NO	PART NAME	QTY		
1	862 00 00 A	FRONT SEAT ASSY	1		
1	863 00 00 OR	FRONT SEAT ASSY-CCS	1		
(3)	(4)	(5) (6)	(7)		(8)

	L =LEFT HAND DRIVE		
	R=RIGHT HAND DRIVE		

1. GROUP NO.

The 1st digit indicates “MAIN GROUP” and next two digits indicate “SUB GROUP NO”.

2. SUB GROUP NAME.

This indicates the name of sub group within the main group.

3. KEY NUMBER.

Key number corresponds with the reference number on the illustration.
Key numbers are not always sequenced.

4. PART NUMBER.

The number assigned to each part.

5. REV. (REVISION).

When the part is upgraded according to the requirement the revision i s changed instead of changing the Part No.itself.

6. PART NAME.

It is the name assigned to a part.

7. QTY.

* This column indicates the Qty required per sub group.
* The quantity is normally shown by numeric or also by symbol as below.

A =As required quantity.

8. REMARKS.

Supplementary or reference information is given in this column.

(CONTENTS)

Specification, Use, Type, Applicable country etc.

II. ABBREVIATIONS

	ABBR'N	ORIGINAL WORD
1	A/C	AIR CONDITIONING
2	ACC,ACCL	ACCELERATOR
3	AMP	AMPERE
4	ASSY	ASSEMBLY
5	BKT	BRACKET
6	BRG	BEARING
7	CCS	CLIMATIC CONTROL SEAT
8	CDL	CENTRAL DOOR LOCKING
9	CN	CONNECTOR
10	COL	COLUMN
11	DIA	DIAMETER
12	Eg	EXAMPLE
13	EMS	ENERGY MANAGEMENT SYSTEM
14	EPDM	
15	Etc	ET-CETRA
16	Fr,Frt	FRONT
17	FWD	FORWARD
18	HYD	HYDRAULIC
19	IP	INSTRUMENT PANEL
20	LH	LEFT HAND
21	MISC	MISCELLANEOUS
22	MM	MILLIMETER
23	MTG	MOUNTING
24	PB	PARKING BRAKE
25	POT	POTENTIOMETER
26	PVC	POLY VINYL CHLORIDE
27	QTR	QUARTER
28	RH	RIGHT HAND
29	Rr	REAR
30	RT	RING TERMINAL
31	SAE	STANDARDS OF AUTOMOBILE ENGINEERING
32	SPL	SPECIAL
33	SQ	SQUARE
34	ST	STEERING
35	SUSP'N	SUSPENSION
36	VIN	VEHICLE IDENTIFICATION NUMBER
36	WLDMT	WELDMENT

III. OPTION CODE TABLE

	CODE	DESCRIPTION
1	&	TOGETHER WITH
2	--	EXCEPT
3	/	OR
4	CCS	CLIMATIC CONTROL SEAT
5	BLW	BLOWER
6	DFR	DEFROSTER
7	DFG	DEFOGGER
8	SNR	STEREO (REGULAR)
9	SKO	STEREO (OPTIONAL)
10	CDL	CENTRAL DOOR LOCKING SYSTEM
11	A/C	AIR CONDITIONER

IV. VEHICLE COLOR TABLE

	COLOR CODE	COLOR
1	324 C5	NATURE GREEN
2	369 D5	BLUE ENVY
3	306 A4	AUTUMN RUST
4	409 D5	CHERRY RED
5	431 A4	PASSION YELLOW
6	508 C6	ANGEL WHITE
7		BLACK

V. REVA PARTS NUMBERING SYSTEM

ABC DE FG

1. "A" represents the SYSTEM (0 - 9).
   - 000 General items such as fasteners/paints/adhesives
   - 100 Suspension Components
   - 200 Brake system
   - 300 Steering System
   - 400 Drive Train
   - 500 Chassis Structure
   - 600 Chassis/Exterior misc.
   - 700 Exterior
   - 800 Interior
   - 900 Electrical
2. "B" represents the Assemblies.
   e.g: The category which determines the part.
3. "C" represents the Sub Assemblies.
4. "D" represents Side in which part fits vehicle.
   Left=1, Right=2, Symmetric=0
5. "E" represents Part/Assembly
   Part=1, Assembly=2
6. "F" & "G" represents chronological order & also determines dimension of part.
   e.g: 00 to 99
   e.g: 00 to 99

PART NUMBER & PART NAME INDEX

PART NO.	PART NAME	PAGE NO.	KEY NO
0210105	WASHER, FLAT, M5	32	16
0210105	WASHER, FLAT, M5	70	5
0210106	WASHER, FLAT, M6	8	18
0210106	WASHER, FLAT, M6	10	9
0210106	WASHER, FLAT, M6	22	2
0210106	WASHER, FLAT, M6	26	8
0210106	WASHER, FLAT, M6	40	23
0210106	WASHER, FLAT, M6	64	5
0210106	WASHER, FLAT, M6	66	6
0210106	WASHER, FLAT, M6	66	9
0210106	WASHER, FLAT, M6	68	3
0210106	WASHER, FLAT, M6	78	6
0210108	WASHER, FLAT, M8	2	8
0210108	WASHER, FLAT, M8	4	5
0210108	WASHER, FLAT, M8	8	7
0210108	WASHER, FLAT, M8	26	9
0210108	WASHER, FLAT, M8	48	15
0210108	WASHER, FLAT, M8	66	7
0210108	WASHER, FLAT, M8	88	3
0210109	FLAT WASHER - M8 , SPECIAL	66	8
0210110	WASHER, FLAT, M10	2	9
0210110	WASHER, FLAT, M10	4	21
0210110	WASHER, FLAT, M10	6	4
0210110	WASHER, FLAT, M10	10	7
0210110	WASHER, FLAT, M10	32	3
0210110	WASHER, FLAT, M10	48	4
0210110	WASHER, FLAT, M10	54	2
0210110	WASHER, FLAT, M10	80	8
0210112	WASHER, FLAT, M12	2	10
0210112	WASHER, FLAT, M12, PUNCHED	4	38
0210112	WASHER, FLAT, M12, PUNCHED	6	27
0210113	WASHER, FLAT, M12, MACHINED	2	11
0210113	WASHER, FLAT, M12, MACHINED	4	15
0210116	WASHER, FLAT, M 16	2	12
0220104	WASHER, LOCK, M4	88	4
0220104	WASHER, LOCK, M4	90	2
0220105	WASHER, LOCK M5	12	16
0220105	WASHER, LOCK M5	26	10
0220106	WASHER, LOCK M6	8	17
0220106	WASHER, LOCK M6	10	10
0220106	WASHER, LOCK M6	22	3
0220106	WASHER, LOCK M6	26	11
0220106	WASHER, LOCK M6	42	2
0220106	WASHER, LOCK M6	64	6
0220106	WASHER, LOCK M6	68	4
0220106	WASHER, LOCK M6	78	7

PART NO.	PART NAME	PAGE NO.	KEY NO
0220108	WASHER, LOCK M8	2	13
0220108	WASHER, LOCK M8	4	6
0220108	WASHER, LOCK M8	8	6
0220108	WASHER, LOCK M8	10	21
0220108	WASHER, LOCK M8	26	12
0220108	WASHER, LOCK M8	48	16
0220108	WASHER, LOCK M8	66	10
0220108	WASHER, LOCK M8	88	5
0220110	WASHER, LOCK M10	2	14
0220110	WASHER, LOCK M10	4	20
0220110	WASHER, LOCK M10	6	5
0220110	WASHER, LOCK M10	10	6
0220110	WASHER, LOCK M10	32	4
0220110	WASHER, LOCK M10	48	3
0220110	WASHER, LOCK M10	54	3
0220110	WASHER, LOCK M10	80	7
0220112	WASHER, LOCK M12	2	15
0220112	WASHER, LOCK M12	4	16
0220112	WASHER, LOCK M12	10	2
0220197	WASHER, SERATED CONICAL, M8	30	90
0230105	WASHER FLAT M5, LARGE	6	43
0230106	WASHER FLAT, M6, LARGE	42	3
0230106	WASHER FLAT, M6, LARGE	64	7
0230106	WASHER FLAT, M6, LARGE	68	5
0230106	WASHER FLAT, M6, LARGE	70	6
0230107	WASHER, CUP M5, HEADLIGHT ASSY	32	17
0230110	WASHER FLAT, LARGE OD M10	6	8
0240102	D-WASHER HOOD HINGE ASSY.	32	10
0250101	WASHER-SEAL BRAKE LIGHT LENS	24	18
0250105	PLASTIC WASHER - DIA 20 X 5 X 2 THK	18	39
0250106	RUBBER WASHER - 6X12X2	64	8
0250108	SPECIAL WASHER - ALUMINIUM : FOR TX	12	29
0250109	O-RING	12	28
0300105	WING NUT STAMPING M5	32	18
0300126	FLANGE NUT - M6	68	6
0310104	NUT, HEX, M4 X 0.7	88	6
0310104	NUT, HEX, M4 X 0.7	90	3
0310106	NUT, HEX, M6 X 1.0	10	11
0310106	NUT, HEX, M6 X 1.0	68	15
0310108	NUT, HEX, M8 X 1.25	2	16
0310108	NUT, HEX, M8 X 1.25	6	30
0310108	NUT, HEX, M8 X 1.25	58	15
0310108	NUT, HEX, M8 X 1.25	66	11
0310108	NUT, HEX, M8 X 1.25	88	7
0310110	NUT, HEX, M10 X1.50	2	17
0310110	NUT, HEX, M10 X1.50	4	23

PART NO.	PART NAME	PAGE NO.	KEY NO
0010125	SCREW, MACHINE, M5 X 0.8 X 25	24	17
0030115	SCREW, MACHINE, M3X0.5X15, STAINLESS STEEL	46	24
0030115	SCREW, MACHINE, M3X0.5X15, STAINLESS STEEL	48	10
0030120	SCREW MACHINE M3X0.5X20	18	24
0040108	MACHINE SCREW - CROSS RECESSED COUNTERSUNK HEAD	66	3
0040135	SCREW MACHINE M4x35 PAN HEAD	18	34
0040145	SCREW, MACHINE, PAN HEAD, M4X0.7X45	32	5
0050120	SCREW MACHINE M5 X .8 X 20 PAN HEAD	26	3
0050120	SCREW MACHINE M5 X .8 X 20 PAN HEAD	34	16
0050120	SCREW MACHINE M5 X .8 X 20 PAN HEAD	48	7
0050120	SCREW MACHINE M5 X .8 X 20 PAN HEAD	70	1
0060110	SCREW MACHINE M6X1X10	40	13
0060120	SCREW, MACHINE, M6 X 1.0 X 20	18	9
0060120	SCREW, MACHINE, M6 X 1.0 X 20	26	4
0060120	SCREW, MACHINE, M6 X 1.0 X 20	70	2
0060120	SCREW, MACHINE, M6 X 1.0 X 20	78	5
0060135	SCREW MACHINE M6X1.0X35 TRUSS HEAD	40	22
0070125	WELL NUT M5X0.8	24	19
0070125	WELL NUT M5X0.8	34	15
0070125	WELL NUT M5X0.8	48	6
0100115	BOLT, HEX, M5X0.8X15L	12	15
0120112	BOLT, HEX, M4 X 0.7 X 12	6	55
0120112	BOLT, HEX, M4 X 0.7 X 12	64	1
0120112	BOLT, HEX, M4 X 0.7 X 12	70	3
0120125	BOLT, HEX, M4X0.7X25	6	39
0120125	BOLT, HEX, M4X0.7X25	76	1
0120161	STUD M5	32	14
0130115	BOLT, HEX, M6 X 1.0 X 15 NICKEL PLATED	66	1
0130116	BOLT, HEX, M6 X 1.0 X 16	4	44
0130116	BOLT, HEX, M6 X 1.0 X 16	22	1
0130120	BOLT, HEX, M6 X 1.0 X 20	42	1
0130120	BOLT, HEX, M6 X 1.0 X 20	64	2
0130120	BOLT, HEX, M6 X 1.0 X 20	66	2
0130125	BOLT, HEX, M6 X 1.0 X 25	6	52
0130125	BOLT, HEX, M6 X 1.0 X 25	8	8
0130125	BOLT, HEX, M6 X 1.0 X 25	10	12
0130130	BOLT HEX M6X1X30	8	23
0130135	BOLT, HEX, FULL THREAD, M6 X 1.0 X 35	32	9
0130135	BOLT, HEX, FULL THREAD, M6 X 1.0 X 35	68	1
0130145	BOLT, HEX, M6 X 1.0 X 45	8	16
0130145	BOLT, HEX, M6 X 1.0 X 45	64	3
0130145	BOLT, HEX, M6 X 1.0 X 45	68	2
0140116	BOLT, HEX, M8 X 1.25 X 16	26	5
0140117	BOLT HEX M8 X 1.25X 16 NICKEL PLATED	84	3
0140117	BOLT HEX M8 X 1.25X 16 NICKEL PLATED	88	1
0140124	BOLT HEX HEAD M8X25 NICKEL PLATED	58	12

PART NO.	PART NAME	PAGE NO.	KEY NO
0140125	BOLT, HEX, M8 X 1.25 X 25	4	7
0140125	BOLT, HEX, M8 X 1.25 X 25	6	59
0140125	BOLT, HEX, M8 X 1.25 X 25	26	6
0140130	BOLT, HEX, M8 X 1.25 X 30	4	31
0140130	BOLT, HEX, M8 X 1.25 X 30	10	14
0140130	BOLT, HEX, M8 X 1.25 X 30	48	14
0140135	BOLT HEX,FULL THREAD, M8 X 1.25 X 35	6	29
0140135	BOLT HEX,FULL THREAD, M8 X 1.25 X 35	8	5
0140135	BOLT HEX,FULL THREAD, M8 X 1.25 X 35	10	22
0140160	BOLT, HEX, M8X1.25 X 60, CABLE S1	66	4
0150125	BOLT, HEX, M10 X 1.50 X 25	4	22
0150125	BOLT, HEX, M10 X 1.50 X 25	6	7
0150125	BOLT, HEX, M10 X 1.50 X 25	10	5
0150125	BOLT, HEX, M10 X 1.50 X 25	54	1
0150125	BOLT, HEX, M10 X 1.50 X 25	80	6
0150126	BOLT, HEX, M10 X 1.25X25	2	1
0150130	BOLT, HEX, M10 X 1.50 X 30	2	2
0150130	BOLT, HEX, M10 X 1.50 X 30	48	2
0150136	BOLT HEX M10 X 1.25 X 35	2	3
0150145	BOLT, HEX, M10 X 1.50 X 45	8	22
0150146	BOLT, HEX, M10 X 1.50 X 45	2	4
0150146	BOLT, HEX, M10 X 1.50 X 45	6	3
0150170	BOLT,HEX, M10X1.5X70	32	2
0150180	BOLT, HEX, SELF CENTERING,M10 X 1.5 X 80	2	5
0150180	BOLT, HEX, SELF CENTERING,M10 X 1.5 X 80	4	25
0150190	BOLT, HEX, M10 X 1.5 X 90	32	25
0160100	BOLT HEX,SELF CENTERING, M12 X 1.75 X 100	4	37
0160120	BOLT, HEX, M12 X 1.25 X 20	2	6
0160160	BOLT, HEX , M12 X 1.75 X 60	2	7
0160165	BOLT, HEX, M12 X 1.75 X 65	4	17
0180103	CAP SCREW, SOCKETHEAD, M8 X 1.25 X 12	12	30
0180139	HEX SOCKET HEAD CAP BOLT M5X0.8X40 LONG	56	7
0180190	SOCKET SCREW CSK HEAD M6 X 1X 12	4	12
0180191	HEXAGONAL SOCKET HEAD CAP SCREW M8X1.25X25	30	89
0210103	WASHER, FLAT, M3	18	23
0210103	WASHER, FLAT, M3	48	11
0210104	WASHER, FLAT, M4	6	40
0210104	WASHER, FLAT, M4	6	54
0210104	WASHER, FLAT, M4	32	6
0210104	WASHER, FLAT, M4	64	4
0210104	WASHER, FLAT, M4	66	5
0210104	WASHER, FLAT, M4	70	4
0210104	WASHER, FLAT, M4	88	2
0210104	WASHER, FLAT, M4	90	1
0210105	WASHER, FLAT, M5	18	29
0210105	WASHER, FLAT, M5	26	7

PART NO.	PART NAME	PAGE NO.	KEY NO
0310110	NUT, HEX, M10 X1.50	32	26
0310111	NUT, HEX, M10 X 1.25	2	18
0310112	NUT, HEX, M12 X1.75	66	12
0310121	NUT HEX THIN, M8X1.25	54	4
0310125	NUT, HEX, M12 X 1.25	10	1
0320103	NUT, NYLOCK, M3 X .5	18	22
0320103	NUT, NYLOCK, M3 X .5	48	12
0320104	NUT, NYLOCK, M4 X .7	6	41
0320104	NUT, NYLOCK, M4 X .7	6	53
0320104	NUT, NYLOCK, M4 X .7	32	7
0320104	NUT, NYLOCK, M4 X .7	76	2
0320105	NUT, NYLOCK, M5 X .8	70	7
0320106	NUT, NYLOCK, M6 X1.0	18	10
0320106	NUT, NYLOCK, M6 X1.0	26	13
0320106	NUT, NYLOCK, M6 X1.0	64	9
0320106	NUT, NYLOCK, M6 X1.0	68	17
0320112	NUT, NYLOCK, M12 X 1.75	2	19
0320112	NUT, NYLOCK, M12 X 1.75	4	18
0320116	NUT NYLOCK,M16X1.5	2	20
0330106	NUT, U-TYPE #8, .61L X .44W X .05 - .09T	26	14
0330106	NUT, U-TYPE #8, .61L X .44W X .05 - .09T	38	3
0330107	NUT, U-TYPE #8, .67L X .44W X .11 - .19T	32	27
0370112	CASTLE NUT, M12 X 1.25	10	24
0370116	NUT, CASTLE , M16 X 1.5	4	13
0410101	RIVET, POP, 4X8X15.5 L, NORMAL DOME HEAD	6	48
0410101	RIVET, POP, 4X8X15.5 L, NORMAL DOME HEAD	18	6
0410101	RIVET, POP, 4X8X15.5 L, NORMAL DOME HEAD	18	38
0410101	RIVET, POP, 4X8X15.5 L, NORMAL DOME HEAD	34	10
0410102	RIVET, POP,4X12X15.5L,LARGE DOME HEAD	20	4
0410102	RIVET, POP,4X12X15.5L,LARGE DOME HEAD	22	1
0410102	RIVET, POP,4X12X15.5L,LARGE DOME HEAD	26	15
0410102	RIVET, POP,4X12X15.5L,LARGE DOME HEAD	40	5
0410105	RIVET POP, 4X12X15.5L, POWDER COATED,	26	16
0430101	RIVETS, DOUBLE FACED	18	7
0430101	RIVETS, DOUBLE FACED	20	3
0450101	2 PIECE RIVET	24	2
0460101	RIVET SOLID	42	4
0510109	SCREW SELFTAP 4.2X9	18	30
0510114	SCREW, SELF TAP 4.2X13 PAN HEAD	50	3
0510114	SCREW, SELF TAP 4.2X13 PAN HEAD	80	5
0510115	SCREW, SELFTAP, 4.2 X 13	18	40
0510115	SCREW, SELFTAP, 4.2 X 13	26	17
0510115	SCREW, SELFTAP, 4.2 X 13	34	5
0510115	SCREW, SELFTAP, 4.2 X 13	38	11
0510115	SCREW, SELFTAP, 4.2 X 13	46	1
0510115	SCREW, SELFTAP, 4.2 X 13	64	10

PART NO.	PART NAME	PAGE NO.	KEY NO
0510115	SCREW, SELFTAP, 4.2 X 13	70	8
0510120	SCREW, SELFTAP, 4.2 X 19	18	4
0510120	SCREW, SELFTAP, 4.2 X 19	32	33
0510120	SCREW, SELFTAP, 4.2 X 19	38	4
0510120	SCREW, SELFTAP, 4.2 X 19	46	2
0510120	SCREW, SELFTAP, 4.2 X 19	50	6
0510120	SCREW, SELFTAP, 4.2 X 19	80	4
0510124	SCREW SELF TAP PAN HEAD, 3.0 X 25	20	12
0510125	SCREW SELFTAP 4.2 X 25	32	30
0530120	HEX HEAD SELF DRILLING SCREW 4.2 X 19	6	56
0530120	HEX HEAD SELF DRILLING SCREW 4.2 X 19	34	6
0530120	HEX HEAD SELF DRILLING SCREW 4.2 X 19	38	5
0530120	HEX HEAD SELF DRILLING SCREW 4.2 X 19	70	25
0530128	HEX HEAD SELF DRILLING SCREW 4.8 X 28	68	16
0530132	HEX HEAD SELF DRILLING SCREW 4.2 X 32	34	2
0540101	SCREW, ECO-SYN M3.5, PAN HEAD	20	21
0540101	SCREW, ECO-SYN M3.5, PAN HEAD	22	2
0550105	SCREW ALLEN - M5 X 0.8 X 25 - ENMOLDED , ACRILIC RED	24	20
0550115	SCREW ALLEN - M5 X 0.8 X 25 - ENMOLDED, ACRILIC, AMBER	24	21
0610103	SEALANT- SILICONE RTV-BLACK COLOUR	20	24
0610103	SEALANT- SILICONE RTV-BLACK COLOUR	28	77
0610103	SEALANT- SILICONE RTV-BLACK COLOUR	34	3
0610104	ADHESIVE- RUBBER (DENDRITE)	28	78
0610105	SEALANT SILICONE RTV-CLEAR	20	25
0610138	URETHANE ADHESIVE - BETA SEAL U414 DOW	20	23
0610138	URETHANE ADHESIVE - BETA SEAL U414 DOW	40	6
0620104	BASE MATL - LACOM STICKER	30	79
0620108	LACOM STICKER, DIA 19 MM - RED	30	80
0620109	LACOM STICKER, DIA 19 MM - BLUE	30	81
0620111	LACOM STICKER, DIA 19 MM - YELLOW	30	82
0620112	LACOM STICKER, DIA 19 MM - WHITE	30	83
0620113	LACOM STICKER, DIA 19 MM - GREEN	30	84
0620114	LACOM STICKER, DIA 19 MM - COPPER DUST	30	85
0620116	SEALANT GASKET, LT - 510	12	27
0630109	METLOK 492	12	26
0630115	BRAKE FLUID	8	19
0630116	TRANSMISSION OIL CASTROL 75 W 90 SYNTHETIC	12	19
0810101	SPLIT PIN M2.5 X 25	8	3
0810101	SPLIT PIN M2.5 X 25	10	25
0810106	SPLIT PIN 4X40	4	14
0810107	SPLIT PIN 3.2 X 20,	6	14
0810113	CLEVIS PIN-PB LEVER-PB HANDLE	6	13
0820106	CLIP PLASTIC, PUSH TYPE	50	4
0820111	CAP BASE - SCREW SELF TAP - 4.2	46	3
0820112	COVER - CAP - SCREW SELF TAP - 4.2	46	4
0820115	CLIP MUSHROOM HEAD	22	3

PART NO.	PART NAME	PAGE NO.	KEY NO
0820116	CLIP MUSHROOM HEAD -LIGHT GRAY	50	14
0820117	PLUG - PLASTIC	26	18
0820118	PLASTIC FASTENER - MUSHROOM HEAD	28	71
0820125	COVER CAP SCREW SELF TAP 4.2 TRUNCATED	46	5
0820127	CLIP,PB-CABLE	6	51
0820130	NYLON INSERT - IP	46	20
0820131	RIVET, PLASTIC - IP-STRG COL COVER MTG	46	6
0820133	PCB SUPPORT - LOCKING TYPE	46	14
0850105	SHIM	32	11
0870107	TAPE DOUBLE SIDED	20	19
0870111	TAPE SINGLE SIDED 5MM(T) X 25MM(W) X 128MM(L)	22	5
0870118	TAPE, SINGLE SIDED 3MM(T) X 15MM(W) X 6MTRS(L)	34	13
0870118	TAPE, SINGLE SIDED	70	9
0870119	TAPE - FILM BASED - DOUBLE SIDED, SELF ADHESIVE	26	19
0910103	CIRCLIP C-3.2	6	12
0910103	CIRCLIP C-3.2	18	28
0910107	CIRCLIP C-7	6	36
0920105	CIRCLIP - INTERNAL - 52X2 N	12	17
1111001	A-ARM ASSY-LH	2	21
1122001	A-ARM WELDMENT - RH	2	21
1121101	UPRIGHT - LH	2	22
1122101	UPRIGHT - RH	2	22
1130000	FRONT STRUT ASSY	2	23
1210010	SHOCK ABSORBER ASSY - REAR	4	19
1230006	CLAMP WELDMENT - ANTI ROLL BAR	4	34
1230105	ANTI-ROLL BAR	4	8
1230107	BUSH - ANTI ROLL BAR MTG	4	41
1230108	BALL JOINT - ANTI ROLL BAR	4	45
1230109	BUSH BALL JOINT MTG - ANTI ROLL BAR	4	9
2000103	SPACER - PEDAL BOX MTG	6	6
2000115	PIVOT PIN - PEDAL BOX - RHD	6	25
2000116	HINGE PIN - PEDAL BOX - LHD	6	26
2000122	P-CLAMP-PB CABLE SECONDARY	6	60
2100100	MASTER CYLINDER	8	4
2100110	GASKET MASTER CYLINDER	8	2
2210101	HOSE, BRAKE-HYD	4	10
2210103	E - RING	2	24
2210103	E - RING	8	20
2210108	FLEXIBLE HOSE - FRONT DISC BRAKE	2	25
2221110	BUNDY, MC TO HOSE (FRONT) - LH	8	9
2221111	BUNDY MC TO PV LEFT - RHD	8	10
2221116	BUNDY, PV TO HOSE (REAR), LH	8	11
2221119	BUNDY REAR LH-HOSE TO BACK PLATE	4	40
2222110	BUNDY, MC TO HOSE (FRONT), RH	8	12
2222111	BUNDY, MC TO PV RIGHT	8	13
2222116	BUNDY, PV TO HOSE (REAR), RH	8	14
2222119	BUNDY REAR RH-HOSE TO BACK PLATE	4	29
2300020	HUB ASSY FRONT WHEEL	2	26
2300100	PROPORTIONATING VALVE	8	15
2300101	DISC - FRONT BRAKE	2	27
2300102	MTG BRACKET - CALIPER ASSY	2	28
2300103	COLLARED BUSH -DUST COVER MTG-DISC BRAKE	2	29
2300104	DUST COVER - FRONT DISC BRAKE	2	30
2300106	BANJO BOLT	2	31
2300107	COPPER WASHER	2	32
2301000	DISC CALIPER ASSY. LH	2	33
2302000	DISC CALIPER ASSY. RH	2	36
2410001	CABLE ASSY PB-SECONDARY	6	50
2410009	CABLE ASSY PB-PRIMARY	6	58
2410102	PULLEY-PB CABLE JOINT	6	49
2410111	DUST COVER-PB	6	57
2430001	LINKAGE PB ASSY - RHD	8	21
2450001	PB LEVER WELDMENT - RHD	6	15
2450010	PARK BRAKE HANDLE ASSY - STD	6	9
2450030	PB LEVER WELDMENT - LHD	6	10
2450106	CLEVIS PIN - PB HANDLE	6	11
2500105	RETURN SPRING, BRAKE ARM	6	18
2500115	RETURN SPRING - BRAKE ARM - LHD	6	19
2510015	BRAKE ARM WELDMENT	6	21
2510025	BRAKE ARM WELDMENT - LHD	6	22
2510106	NYLON BUSHING, BRAKE ARM	6	17
2510109	NYLON BUSHING, POT LINK	6	42
2510110	PAD BRAKE PEDAL	6	24
2510120	CLEVIS PIN, MASTER CYLINDER	8	1
2520111	SPRING BRAKE LINK	6	45
2600107	LEVER - BRAKE POT	6	23
2621002	BRAKE ASSEMBLY REAR LH	4	39
2622002	BRAKE ASSEMBLY REAR RH	4	28
2710135	GREASE CAP	2	34
2720101	BRAKE DRUM REAR MACHINED	4	11
3100100	STEERING RACK - RHD	10	28
3100101	BRACKET - STEERING RACK SIDE	10	23
3100102	BRACKET- STEERING PINION SIDE	10	20
3100103	STEERING TIE ROD	10	16
3100105	STEERING TIE ROD END BALL JOINT	10	17
3100110	SPACER RACK MOUNT	10	19
3100130	RUBBER MOUNT PINION SIDE	10	18
3100135	SEAL GASKET, RACK	10	15
3101140	STEERING ARM - LH	2	35
3102140	STEERING ARM - RH	2	35
3200001	STEERING COLUMN (SOLID) - REGULAR.	10	26
3200006	STEERING COLUMN (SOLID) - WITH LOCKING ARRANGEMENT	10	27
3200113	SHIM UPPER- STEERING COLUMN, SHORT	10	4
3200114	SHIM LOWER-STEERING COLUMN, LONG	10	13
3200127	COVER - STEERING LOCK	46	7

PART NO.	PART NAME	PAGE NO.	KEY NO
3210000	ST COLUMN SUPPORT ASSY	10	8
3300101	STEERING WHEEL (REGULAR)	10	3
3310101	STEERING WHEEL - LEATHER WRAPPED	10	3
4110193	BUSHING TRAILING ARM	4	36
4111003	REAR AXLE WELDMENT - LH	4	33
4111161	DRIVE SHAFT - LH	4	30
4112007	REAR AXLE WELDMENT - RH - ACD	4	26
4112160	DRIVE SHAFT - RH	4	27
4120004	BREATHER ASSY - TRANSMISSION	4	3
4120004	BREATHER ASSY - TRANSMISSION	12	3
4120009	DIFFERENTIAL ASSY-ACD	12	4
4120066	MAGNETIC DRAIN PLUG	12	2
4120078	TRANSMISSION CASING SET	12	1
4120080	TRANSMISSION ASSEMBLY - 9.4 RATIO	4	2
4120087	SPEED SENSOR ASSY HALL EFFECT	12	5
4120095	GEAR ASSY - INTERMEDIATE - 9.4:1	12	10
4120124	UNION-BREATHER HOSE	12	11
412012910	SHIM - INPUT SHAFT DIA 52	12	20
412012915	SHIM - INPUT SHAFT DIA 52	12	21
412012920	SHIM - INPUT SHAFT DIA 52	12	22
412013110	SHIM - OUTPUT DIA 80	12	23
412013115	SHIM - OUTPUT DIA 80	12	24
412013120	SHIM - OUTPUT DIA 80	12	25
412014660	BEARING 6208 - NORMAL CLEARANCE	12	6
4120147	SEAL -OIL - DIA 40 X DIA 22 X 7	12	7
412015361	BEARING - 6205 - RS1 - NORMAL CLEARENCE	12	18
4120157	BEARING 6304 - NORMAL CLEARANCE	12	9
4120176	INPUT GEAR (19 T) ACD	12	8
4120181	END COVER - INPUT	12	12
4120183	END COVER - OUTPUT	12	14
4120186	END COVER INTERMEDIATE	12	13
4140131	SENSOR BEARING BMH-6206	56	4
4150005	TRAILING ARM WELDMENT - ACD	4	35
4150036	WELDMENT-TRACTION MOTOR GUARD	4	32
4160001	PANHARD ROD	4	24
4200105	WHEEL RIM 4J X 13"- STEEL (STEELSTRIPS)	80	9
4200110	TYRE 13" (TUBE TYPE)	80	12
4200111	TYRE, 13" TUBELESS	80	11
4200113	WHEEL TUBE 13"	80	13
4200115	VALVE STEM TUBELESS TYRE	80	10
4200150	WHEEL COVER - LARGE	74	8
4310014	ACCELERATOR ROD WELDMENT - LHD	6	33
4310020	ACCL ROD WLDMT	6	32
4310107	RUBBER STOPPER ACC PEDAL	6	35
4310108	PAD - ACCEL. PEDAL	6	34
4310109	SPRING-ACCEL- ROD	6	20

PART NO.	PART NAME	PAGE NO.	KEY NO
4310110	RETURN SPRING ACCL POT	6	44
4320112	LEVER POTENTIOMETER	6	38
5000025	CHASSIS FRAME ASSY - MAIN - EURO - A/C - RHD - CW	14	1
5110124	FLOOR CROSS 4060	14	2
5110128	BRACKET CENTER	14	3
5111133	SHOCK GUSSET TUBE LEFT	14	4
5112135	SHOCK MOUNT GUSSET TUBE-RH	14	5
5120002	A-ARM MOUNT WELDMENT	14	6
5120008	SPARE MOUNT WELDMENT	80	15
5120030	REAR BUMPER WELDMENT	14	7
5120106	A-ARM MT - PLATE FR	14	8
5120107	A-ARM MT PLATE RR	14	9
5140101	BATTERY CENTER SUPPORT	14	10
5151000	SHOCK MOUNT WELDMENT REAR-LH	14	11
5201002	CHASSIS SIDE ASSY - LH - CW	14	12
5202002	CHASSIS SIDE ASSY - RH - CW	14	13
5211000	HINGE PILLAR WELDMENT ASSY -LH	14	14
5230106	STRIKER PLATE	14	15
5231000	LATCH PILLAR WELDMENT -LH	14	16
5241000	ROCKER BEAM - WELDMENT-- LH	14	17
5250103	SLEEVE - 7/16" UNF,3/BELT TOP ANCHORAGE	14	18
5250120	INSERT - WINDSHIELD MTG - UPPER	14	19
5250121	INSERT - WINDSHIELD MTG - MIDDLE	14	20
5250122	INSERT WINDSHIELD MTG - LOWER	14	21
5250123	BRKT - A PILLAR MOUNT - UPPER - CW	14	22
5250124	BRKT - A PILLAR MOUNT - LOWER - CW	14	23
5251106	CANTRAIL-LH-CW	14	24
5270129	FLANGE - A PILLAR - DOOR - UPPER	14	25
5270130	FLANGE - A PILLAR - DOOR - MIDDLE	14	26
5270131	FLANGE - A PILLAR - DOOR - LOWER	14	27
5271121	REAR QUARTER PANEL VERT-LH	14	28
5310010	PEDAL BOX WELDMENT - LHD	6	2
5310034	FRONT BUMPER WELDMENT	14	29
5310050	PEDAL BOX WELDMENT	6	1
5311101	STRUT BEAM FORWARD -LH	14	30
5311102	STRUT BEAM REAR -LH	14	31
5322000	STRUT MOUNT WLDMT -RH	14	32
5340000	WIND SHIELD BEAM WELDMENT	14	33
5350000	STRUT CROSS MEMBER WELDMENT	14	34
5410010	ROOF BOW A WELDMENT - CW	14	35
5410101	ROOF BOW - A	14	36
5410102	ROOF BOW - B	14	37
5410103	ROOF BOW - C	14	38
5410106	MIRROR BRACKET	14	39
5410110	BRACKET ROOF INNER	14	40

PART NO.	PART NAME	PAGE NO.	KEY NO
5410111	BRKT - WINDSHIELD FRAME TOP MTG - CENTER	14	41
5410112	BRKT - WINDSHIELD FRAME TOP MTG - SIDE	14	42
5420103	HATCH DAMPER MOUNT	14	43
5500010	BONDED ASSY WIND SHIELD FRAME - CW	40	2
6100009	ROOF SPOILER ASSY - REAR	86	9
6100021	ASSEMBLY BONDED ROOF-CW	22	4
6100101	SEAL CANTRAIL	20	7
6100108	FRONT SUNSHIELD	86	10
6101105	CARRIER - SEAL CANTRAIL -LH	20	5
6101106	END CAP, FRONT-SEAL CANTRAIL-LH	20	8
6101107	END CAP, REAR-SEAL CANTRAIL-LH	20	10
6102105	CARRIER - SEAL CANTRAIL - RH	20	6
6102106	END CAP, FRONT-SEAL CANTRAIL-RH	20	9
6102107	END CAP, REAR-SEAL CANTRAIL-RH	20	11
6201001	ASSY BONDED REAR QUARTER PANEL - LH	18	11
6202000	REAR QUARTER PANEL ASSY - RH	18	12
6210002	ASSY BONDED CHARGE PORT LID	18	25
6210103	TAPE, SINGLE SIDED, CHARGE PORT LID	18	26
6210104	DECAL, POWER 240 V AC, 15 AMPS	18	37
6210104	DECAL, POWER 240 V AC, 15 AMPS	82	8
6210105	DECAL, WATER AFTER CHARGING	18	36
6210105	DECAL, WATER AFTER CHARGING	82	10
6210106	SPACER - QUICK DISCONNECT	18	35
6210108	DECAL-TYRE DATA & RR HATCH REL-BLACK	18	16
6210108	DECAL-TYRE DATA & RR HATCH REL-BLACK	82	16
6210109	DECAL-TYRE DATA & RR HATCH REL-SILVER	18	16
6210109	DECAL-TYRE DATA & RR HATCH REL-SILVER	82	17
6210128	HINGE - CHARGE PORT LID	18	27
6210129	SPRING CHARGE PORT LID	18	32
6210130	HINGE PIN - CHARGE PORT	18	31
6210132	HATCH RELEASE LEVER TRIM SEAL	18	15
6210133	SECONDARY BONDED PIECE - CHARGE PORT	18	19
6210135	NUT PLATE WELDMENT - CHARGE PORT	18	20
6211115	EXTERIOR DECAL - RR QTR PANEL - LH	82	18
6211140	WHEEL FLARE - REAR QUARTER PANEL - LH	86	6
6212115	EXTERIOR DECAL - RR QTR PANEL - RH	82	19
6212140	WHEEL FLARE - REAR QUARTER PANEL - RH	86	7
6311101	CANTRAIL PANEL - LH	20	1
6312101	CANTRAIL PANEL - RH	20	2
6320103	SEAL TRIM BC PILLAR	20	18
6320104	END CAP - TRIM BC PILLAR	20	20
6320106	COVER - END CAP - TRIM BC PILLAR	20	22
6410000	ASSY BONDED TAIL LIGHT PANEL	24	1
6410103	DECAL-EV ELECTRIC VEHICLE-TAIL LIGHT PANEL	82	11
6410104	DECAL - REVA CLASSE	82	3
6410127	GROMMET, TAIL LAMP PANEL MOUNT	70	10

PART NO.	PART NAME	PAGE NO.	KEY NO
6411110	TAIL LIGHT LENS - BRAKE & ILLU - LH	24	4
6411117	TAIL LIGHT GASKET UPPER LH	24	5
6411118	TAIL LIGHT GASKET LOWER - LH	24	12
6411120	TAIL LIGHT LENS - TURN SIGNAL - LH	24	11
6412110	TAIL LIGHT LENS - BRAKE & ILLU - RH	24	7
6412117	TAIL LIGHT GASKET UPPER - RH	24	8
6412118	TAIL LIGHT GASKET LOWER - RH	24	15
6412120	TAIL LIGHT LENS - TURN SIGNAL - RH	24	14
6500102	DECAL, REVA-FRONTFENDER/TAIL PANEL	18	3
6500102	DECAL, REVA-FRONTFENDER/TAIL PANEL	82	9
6501105	EXTERIOR DECAL - FRT FENDER - LH	82	20
6502105	EXTERIOR DECAL - FRT FENDER - RH	82	21
6511101	FRONT FENDER - LH	18	1
6511105	WHEEL FLARE - FRONT FENDER - LH	86	2
6512101	FRONT FENDER - RH	18	2
6512105	WHEEL FLARE - FRONT FENDER - RH	86	3
6601100	ROCKER PANEL - LH (ROTOMOLDED)	38	9
6601106	ROCKER PANEL - LH (VAC. FORMED, PAINTED)	38	9
6601107	ROCKER PANEL - LH - SPORTS MODEL	86	4
6602100	ROCKER PANEL - RH	38	10
6602106	ROCKER PANEL - RH (VAC FORMED, PAINTED)	38	10
6602107	ROCKER PANEL - RH - SPORTS MODEL	86	5
6700006	ASSY BONDED HOOD - CW	22	4
6700101	REVA MONOGRAM	22	5
6720010	HOOD LATCH ASSY BOTTOM	22	6
6720020	HOOD LATCH ASSY, TOP	22	7
6800102	HOOD STOP RUBBER	32	23
6800106	NYLON GROMMET - PROP ROD	42	8
6810009	BONDED ASSY - COWL PANEL - CW - RHD	42	5
6810107	COWL PANEL - CW - RHD	42	6
6810110	SECONDARY BONDED PIECE - COWL	42	7
6820106	HOLDER - PROP ROD	18	5
6820107	PROP ROD - CW	42	9
6820113	BRACKET PROP ROD	42	10
6821010	HOOD HINGE ASSY - LH - CW	42	11
6821015	WELDMENT - HOOD HINGE - CHASSIS SIDE - LH - CW	42	12
6821103	HOOD HINGE - PANEL SIDE - LH - CW	42	13
6821104	HOOD HINGE - CHASSIS SIDE - LH - CW	42	14
6822010	HOOD HINGE ASSY - RH - CW	42	15
6822103	HOOD HINGE - PANEL SIDE - RH - CW	42	16
6822104	HOOD HINGE - CHASSIS SIDE - RH - CW	42	17
6900002	ASSY WIND SHIELD WASHER UNIT	54	8
6900041	WIPER MOTOR & LINKAGE ASSY COMPLETE - CW	54	5
6900045	NOZZLE ASSY-WINDSHIELD WASHER-CW	22	8
6910005	WIPER ARM ASSY-CW-RHD	54	6
6920015	WIPER BLADE ASSY - CW	54	7

PART NO.	PART NAME	PAGE NO.	KEY NO
6940010	ASSY PM DC MOTOR - A/C	66	13
6940030	WELDMENT BRKT REAR SUPPORT A/C RHD	66	14
6940030	WELDMENT BRKT REAR SUPPORT A/C RHD	66	17
6940121	SLEEVE - A/C MTG	66	15
6950001	COMPRESSOR ASSEMBLY	66	16
6960005	FAN ASSY - CONDENSER.	68	7
6960102	CONDENSER.	68	8
6960111	RUBBER BUSH - CONDESOR MTG.	68	9
6960117	COLLAR BUSH - CONDENSOR MTG.	68	10
6960118	SPACER - FAN MTG.	68	11
6960119	WASHER FLAT M6 - LARGE SPECIAL	68	12
6961006	WELDMENT CHANNEL LH -CONDENSER MTG.	68	13
6962006	WELDMENT CHANNEL RH - CONDENSER MTG.	68	14
6970001	RECEIVER DRIER ASSEMBLY	64	11
6970011	PIPE ASSY - RECEIVER OUTLET TO INTERMEDIATE CONNECTOR - RHD	64	12
6970012	PIPE ASSY - INTERMEDIATE CONNECTOR TO EVAPORATOR INLET - RHD	64	13
6970013	PIPE ASSY - EVAPORATOR OUTLET TO COMPRESSOR INLET - RHD	64	14
6970014	PIPE ASSY - CONDENSOR OUTLET TO RECEIVER INLET - RHD	64	15
6970015	PIPE ASSY - COMPRESSOR OUTLET TO CONDENSOR INLET - RHD	64	16
6980106	PULLEY - COMPRESSOR.	66	19
6980106	PULLEY - COMPRESSOR.	66	23
6980107	V-BELT	66	20
6980108	PLASTIC COVER - V-BELT.	66	21
6980110	PULLEY - A/C MOTOR (3 RATIO) - 3000 RPM MOTOR	66	18
6980111	GROMMET - EVAPORATOR - PIPE - OUTLET	64	17
6980112	GROMMET - EVAPORATOR - PIPE - INLET	64	18
6980116	DECAL - A/C WARNING INSTRUCTIONS	82	25
6980117	SPACER - V-BELT COVER MTG	66	22
6980121	SOUND DEADENER PAD - HOOD - A/C - CW	22	9
7110010	BONDED ASSY - FRONT BUMPER (THERMOFORMED & PAINTED)	32	1
7110012	ASSY. BONDED FRONT BUMPER PANEL - -PAINTED PRE COLOURED	32	1
7110015	BONDED ASSY - FRONT BUMPER (VAC. FORMED MAT CLEAR)	32	1
7110101	FRONT BUMPER PANEL (ROTO MOULDED)	32	1
7110105	WEDGE - FRONT BUMPER ADJUSTMENT	32	8
7110130	FRONT BUMPER SPOILER	86	1
7120010	BONDED ASSY - REAR BUMPER (VAC FORMED & PAINTED)	32	24
7120012	ASSY. BONDED REAR BUMPER PANEL - PRE COLOURED	32	24
7120015	BONDED ASSY - REAR BUMPER (VAC FORMED & TEXTURED)	32	24

PART NO.	PART NAME	PAGE NO.	KEY NO
7120101	REAR BUMPER PANEL - ROTOMOLDED	32	24
7120107	LOWER SKIRT - REAR BUMPER	32	35
7120130	REAR BUMPER FLARE	86	8
7200105	FOAM INSERT - INSTRUSION BEAM	26	20
7210110	WINDOW FRAME REAR PILLAR	28	76
7211000	DOOR FRAME ASSY - LH (REGULAR)	26	1
7211108	DOOR WINDOW FRAME CLOSEOUT, LH	28	74
7212000	DOOR FRAME ASSY - RH (REGULAR)	26	2
7212108	DOOR WINDOW FRAME CLOSEOUT, - RH	28	75
7220102	PAD SOUND DEADENER, DOOR OUTER LOWER	30	86
7220103	PAD SOUND DEADENER, DOOR OUTER CENTER	30	87
7220104	PAD SOUND DEADENER, DOOR OUTER UPPER	30	88
7221101	DOOR PANEL - LH	26	21
7222101	DOOR PANEL - RH	26	22
7230102	CLIP, CYLINDER SET - DOOR LOCK	26	23
7230106	KNOB - DOOR LOCK - INSIDE	26	24
7230107	CAP - DOOR INSIDE KNOB	26	25
7230110	STRIKER - DOOR LOCK	30	91
7230111	SPACER - DOOR LOCK STRIKER	30	92
7230112	NUT PLATE STRIKER - DOOR LOCK	30	93
7230114	PAD - INSIDE DOOR HANDLE	26	26
7230115	SPRING - NUTPLATE STRIKER	30	94
7230116	RUBBER STOPPER - DOOR INSIDE HANDLE	28	62
7231001	CYLINDER SET - DOOR LOCK - LH	28	60
7231025	LATCH ASSY - DOOR - LH	30	95
7231103	LINKAGE ,DOOR LOCK CYLINDER- LH	26	27
7231104	HANDLE - DOOR OUTER - LH	26	29
7231105	HANDLE - DOOR INSIDE - LH	28	63
7231108	LINKAGE ,DOOR HANDLE INSIDE- LH	26	31
7231109	LINKAGE ,DOOR LOCK KNOB- LH	26	33
7231120	LATCH - DOOR - LH	26	35
7232001	CYLINDER SET - DOOR LOCK - RH	28	61
7232025	LATCH ASSY - DOOR - RH	30	96
7232103	LINKAGE ,DOOR LOCK CYLINDER- RH	26	28
7232104	HANDLE - DOOR OUTER - RH	26	30
7232105	HANDLE - DOOR INSIDE -RH	28	64
7232108	LINKAGE ,DOOR HANDLE INSIDE- RH	26	32
7232109	LINKAGE ,DOOR LOCK KNOB- RH	26	34

PART NO.	PART NAME	PAGE NO.	KEY NO
7232120	LATCH - DOOR - RH	26	36
7240102	LATCH - DOOR GLASS	26	37
7240107	SEAL-UPPER-WINDOW-FRAME	26	40
7241101	GLASS DOOR FRONT-LH	28	41
7241103	GLASS DOOR REAR - LH	28	43
7241104	SEAL - LOWER - WINDOW FRAME - LH	28	45
7241105	SCRAPE DOOR GLASS LH	26	38
7241105	SCRAPE DOOR GLASS LH	28	47
7241120	SEAL BULB DOOR RING-LH	28	49
7242101	GLASS DOOR FRONT-RH	28	42
7242103	GLASS DOOR REAR-RH	28	44
7242104	SEAL - LOWER - WINDOW FRAME-RH	28	46
7242105	SCRAPE DOOR GLASS RH	26	39
7242105	SCRAPE DOOR GLASS RH	28	48
7242120	SEAL BULB-DOOR RING-RH	28	50
7261101	PATCH - MIRROR - OUTSIDE - LH	28	51
7261102	PATCH - MIRROR - INSIDE - LH	28	53
7261103	REAR VIEW MIRROR - EXTERNAL - LH - REGULAR	28	56
7261108	REAR VIEW MIRROR - EXTERNAL - LH - PAINTED	28	56
7262101	PATCH - MIRROR - OUTSIDE - RH	28	52
7262102	PATCH - MIRROR - INSIDE - RH	28	54
7262103	REAR VIEW MIRROR - EXTERNAL - RH - REGULAR	28	57
7262108	REAR VIEW MIRROR - EXTERNAL - RH - PAINTED	28	57
7270000	DOOR HINGE ASSY	28	65
7281105	EXTERIOR DECAL - DOOR OUTER - LH	82	22
7282105	EXTERIOR DECAL - DOOR OUTER - RH	82	23
7311100	WHEEL WELL FRONT - LH	38	1
7312100	WHEEL WELL FRONT - RH	38	2
7320101	PAD SOUND DEADENER WHEEL WELL REAR UPPER	38	8
7321100	WHEEL WELL REAR - LH (FOR ROTOMOLDED BUMPER)	38	6
7322100	WHEEL WELL REAR - RH (FOR ROTOMOLDED BUMPER)	38	7
7331105	MUD FLAP - LH	74	4
7331106	MUD FLAP - REAR -LH	74	4
7332105	MUD FLAP - RH	74	4
7332106	MUD FLAP - REAR - RH	74	4
7410108	CURVED WIND SHIELD GLASS	40	4
7410109	SEAL - WINDSHIELD FRAME - OUTER - CW	40	3
7410111	SEAL - WINDSHIELD FRAME - INNER - CW	40	1
7420105	SEAL INNER - REAR QUARTER GLASS	20	17
7421101	REAR QUARTER GLASS - LH	20	13
7421102	SEAL - H- REAR QUARTER GLASS - LH	20	15
7422101	REAR QUARTER GLASS - RH	20	14
7422102	SEAL - H- REAR QUARTER GLASS - RH	20	16
7430002	HINGE-REAR HATCH ASSY	40	12
7430007	LATCH ASSY - REAR HATCH MALE	40	8
7430103	STRUT - REAR HATCH	40	11

PART NO.	PART NAME	PAGE NO.	KEY NO
7430105	SPACER - HATCH HINGE	40	16
7430107	SEAL, RUBBER EXTERIOR - HATCH MOUNT	40	21
7430114	RUBBER WASHER - HATCH HINGE	40	24
7430118	INSERT - RR HATCH STRUT MTG	40	19
7430119	GASKET RR HATCH STRUT MTG	40	20
7430122	INSERT - RR HATCH HINGE	40	15
7430130	MUSHROOM NUT	40	14
7430137	HANDLE OUTSIDE REAR HATCH GLASS	40	10
7430140	BRACKET RR HATCH STRUT MOUNT	40	18
7430169	RUBBER SPACER - RR HATCH LATCH STRIKER MTG	40	9
7430199	BALL STUD, 10 MM BALL,	40	17
7440102	GLASS - REAR HATCH (WITH DEFOGGER)	40	7
7510101	JACK ASSY	80	1
7510102	JACK HANDLE	80	2
7510103	CLIP JACK HANDLE	80	3
7520000	TOOL KIT ASSY	80	14
8110101	FRONT FLOOR PANEL - RHD	34	1
8150002	OUTLET VENTILATOR ASSY	34	7
8150101	FIREWALL - RHD	34	4
8150115	FIREWALL - A/C	34	4
8400066	INSTRUMENT PANEL ASSY-ACD-EURO-A/C-CW	46	8
8410056	ASSY BONDED FACE PLATE - EURO - A/C	46	25
8410107	INSULATOR - IP GLOVE BOX	46	18
8410119	SEAL - IP LOWER	46	9
8410123	SEAL - IP - UPPER - CW	46	10
8410130	COVER STEERING COLUMN	46	11
8410132	DECAL - RNFB - SWITCH - ACD - RHD	46	22
8420101	KNOB FENR SWITCH	46	23
8430007	IP CLUSTER ASSY - MILES	46	16
8430008	IP CLUSTER ASSY - KM	46	16
8450003	CUP HOLDER TRAY ASSY	46	32
8510102	PULL POCKET DOOR	28	66
8510104	BATTERY BOX - LOWER	34	8
8510105	BATTERY BOX TOP - STD	34	12
8510106	BRKT HOLD DOWN BOX TOP	34	9
8510110	COVER , MAIN FUSE TOP	58	11
8510112	DRAIN VALVE	34	11
8510115	FOAM HOLD DOWNS 5MM(T) X 35MM(W) X 70MM(L)	34	14
8510140	INSULATOR DOOR INNER FRONT	28	55
8511103	INTERIOR DOOR PANEL - LH (REGULAR)	28	67
8511109	INTERIOR DOOR PANEL - LH - SOFT TOUCH	28	69
8511116	SIDE TRIM - DOOR INNER - LH	28	72
8511141	PAD INSULATOR DOOR INNER REAR - LH	28	58
8512103	INTERIOR DOOR PANEL - RH (REGULAR)	28	68
8512109	INTERIOR DOOR PANEL - RH - SOFT TOUCH	28	70
8512116	SIDE TRIM - DOOR PANEL - RH	28	73

PART NO.	PART NAME	PAGE NO.	KEY NO
8512141	PAD INSULATOR DOOR INNER REAR - RH	28	59
8620000	FRONT SEAT ASSY - STD - FABRIC	48	1
8620041	ASSY DC DC CONVERTER CCS (INDEGENOUS) ACD	36	5
8630000	FRONT SEAT ASSY - EURO - CCS - LEATHER	48	1
8630127	DECAL - SWITCH CCS	82	5
8630128	DECAL-SWITCH - CCS - CENTRE	82	14
8640006	STATIC LAP SASH BELT ASSY - REAR	48	21
8640162	TRIM SEAT BOTTOM	48	5
8641050	SEAT BELT ASSEMBLY- FRONT - LH - STD	48	19
8642050	SEAT BELT ASSEMBLY - FRONT - RH - STD	48	20
8650001	FRONT SEAT ASSY - STD-LEATHER	48	1
8660001	REAR SEAT ASSY - STD - LEATHER	48	13
8670000	REAR SEAT ASSY COMPLETE - STD - FABRIC	48	13
8670107	GROMMET SEAT LOCATER	48	18
8670133	SPACER - REAR SEAT MTG	48	17
8680126	HEAD LINER - CW	22	6
8681101	TRIM PANEL , A PILLAR - LH (MAT CLEAR)	50	1
8681102	TRIM PANEL , A PILLAR - LH SOFT FEEL	50	1
8681105	TRIM PANEL , BC PILLAR - LH	50	12
8682101	TRIM PANEL , A PILLAR - RH (MAT CLEAR)	50	2
8682102	TRIM PANEL , A PILLAR - RH SOFT FEEL	50	2
8682105	TRIM PANEL , BC PILLAR - RH	50	13
8710101	HOOD RELEASE LEVER	6	31
8710101	HOOD RELEASE LEVER	18	13
8710102	CABLE HOOD / HATCH RELEASE	18	14
8710102	CABLE HOOD / HATCH RELEASE	22	10
8710105	GRAB HANDLE	50	15
8720001	CENTRAL DOOR LOCKING SYSTEM (AUTOCOP)	76	1
8720003	SIREN ASSY - CDL - AUTOCOP	76	4
8720004	CONTROLLER ASSY - CDL - AUTOCOP	76	5
8720007	CONTROLLER ASSY - CDL - GEMINI	76	3
8720030	WELDMENT BRKT - CONTROLLER MTG - CDL - GEMINI	76	4
8720040	CENTRAL DOOR LOCKING SYSTEM - EURO (GEMINI)	76	5
8720110	ACTUATOR - CENTRAL DOOR LOCK	76	2
8720113	REMOTE CONTROLLER - CDL - AUTOCOP	76	3
8721007	LINKAGE ASSY - CDL - LH	76	6
8722007	LINKAGE ASSY - CDL - RH	76	7
8800041	WELDMENT BRACKET - BLOWER MTG.	70	11
8800050	BONDED ASSY-CASING - FAN SIDE - CLASSE	70	12
8800051	BONDED ASSY-CASING- MOTOR SIDE - CLASSE	70	13
8800060	OUTLET ASSY-BLOWER	70	14
8800106	CERAMIC WASHER	70	15
8800109	RESISTOR - BLOWER - DEFROSTER	70	16
8800141	LOCATING PEG - BLOWER MTG.	70	17
8810010	MOTOR & IMPELLER ASSEMBLY - A/C BLOWER	70	18
8820001	HEATER ASSY DEFROSTER (400 WATTS)	70	19

PART NO.	PART NAME	PAGE NO.	KEY NO
8840102	LOUVRE - VENTILATOR	46	26
8850030	ASSY SLIDING MECHANISM (NEW) - RHD	46	29
8860030	BULB ASSY - BACK LIGHT - BLOWER SWITCH	46	21
8860045	KNOB ASSY - A/C VARIABLE THERMOSTAT	46	33
8860105	SWITCH - BLOWER	46	30
8860107	DECAL - SWITCH BLOWER	46	31
8860107	DECAL - SWITCH BLOWER	82	4
8860111	DECAL - DEFROSTER - SLIDING MECHANISM	46	27
8860111	DECAL - DEFROSTER - SLIDING MECHANISM	82	2
8860112	DECAL - AIR BLOWER - SLIDING MECHANISM	46	28
8860112	DECAL - AIR BLOWER - SLIDING MECHANISM	82	1
8860115	DECAL-SWITCH - CCS	82	12
8860116	DECAL-SWITCH - CCS - CENTER	82	13
8860117	DECAL-SWITCH DEFROSTER CENTER	82	15
8860118	DECAL SWITCH DEFROSTER CENTER	82	7
8860119	DECAL SWITCH BLOWER - CENTER	82	6
8860125	DECAL - SWITCH A/C - CENTER	82	24
8870001	EVAPORATOR ASSEMBLY	70	20
8870115	DRAIN PIPE - A/C	70	21
8890002	A/C MOTOR CONTROLLER ASSY - DOMESTIC	64	19
8890008	RELAY ASSY COMPLETE - A/C - CLASSE	64	20
8910105	SUNVISOR CLIP	50	7
8911101	SUN VISOR -LH	50	5
8912101	SUN VISOR WITH POUCH- RH	50	8
8920101	MIRROR INTERIOR REAR VIEW	50	9
8920102	MIRROR INTERIOR- REAR VIEW - ANTI GLARE	50	9
8930000	CARPET SET - STD - RHD	74	1
8930001	CARPET ASSEMBLY - FRONT - REGULAR - RHD	74	1
8930010	CARPET SET - DELUX - RHD	74	1
8930020	CARPET SET - LHD	74	1
8930101	CARPET REAR (REGULAR)	74	1
8930104	MAT- FLOOR - FRONT (REGULAR)	74	2
8930111	CARPET - FRONT (DELUX)	74	3
9010121	FACE PLATE, CONNECTOR DB9	48	9
9040146	MAIN FUSE	58	10
9090001	CHARGE PORT HANDLE ASSY (CHARGE CABLE)	74	7
9090107	CABLE TIES, 150 MM	18	17
9090107	CABLE TIES, 150 MM	58	16
9090111	CABLE TIE MOUNT, ACC1 (S) SHORT	6	47
9090113	CABLE TIE MOUNT, TC2	18	18
9090119	BASE PLATE - CHARGE PORT	18	33
9090122	HANDLE CHARGE PORT	74	5
9090123	MICRO SWITCH	18	21
9090125	PLUG, 15A, 3 PIN, 230V AC	74	6
9100006	POWER PACK ASSY - TROJAN -ACD	58	1
9110103	BATTERY, 6 V, TROJAN	58	2

PART NO.	PART NAME	PAGE NO.	KEY NO
9120109	TUBING HEAT SHRINK BLACK.	58	8
9120110	PLASTIC CAPS FOR -VE TERMINAL	58	9
9130004	FAN ASSY - AC CONTROLLER & CHARGER COOLING	36	8
9130101	FAN, BATTERY VENTILLATION,	36	9
9150106	FLOAT	58	3
9150114	WATER LEVEL SENSOR	58	5
9150118	RUBBER GROMMET-WATER/TEMP SENSOR	58	17
9150132	END PLUG	58	7
9200031	CABLE ASSY - MOTOR GROUNDING	4	42
9200035	CABLE ASSY -AC TRACTION MOTOR GROUNDING	4	4
9210000	AC INDUCTION MOTOR ASSY	4	1
9210105	FLANGE - NON DRIVE END - AC INDUCTION MOTOR	56	1
9210106	DRIVE END FLANGE - AC INDUCTION MOTOR FOR FLEXI COUPLING	56	2
9210107	AC MOTOR CABLE	56	6
9210107	AC MOTOR CABLE	56	9
9210111	O" RING (DIA 15) - DRIVE END	56	3
9210111	O" RING (DIA 15) - DRIVE END	56	5
9240004	WIRING HARNESS - MAIN - AC DRIVE - RHD	60	4
9240008	WIRING HARNESS - LIGHTING - LHD	60	1
9240009	WIRING HARNESS LIGHTING AC DRIVE RHD	60	2
9240011	WIRING HARNESS - MAIN - AC DRIVE - LHD	60	3
9240015	WIRE HARNESS, DIAGNOSTIC PORT	48	8
9240022	REAR LIGHTING AND HEATER HARNESS - AC DRIVE - RHD	60	5
9240023	REAR LIGHTING AND HEATER HARNESS - AC DRIVE - LHD	60	6
9240060	PACK SENSE HARNESS ASSY	58	4
9240069	ASSY. CLAMP PLATE SENSOR BEARING	56	8
9240085	WIRING HARNESS HEATER END	70	22
9240160	SENSOR BATTERY TEMP	58	6
933000051	EMS ASSY - EURO	36	1
9340006	ASSY CHARGER-400 W COMPLETE - ACD	36	3
9380060	EMI CORE ASSY - BATTERY / INPUT SIDE	36	6
9380065	EMI CORE ASSY - MOTOR / OUTPUT SIDE	36	7
9380120	BUS BAR POSITIVE	88	8
9390126	STRAIN RELIEF - AC MOTOR CABLE	4	43
9420016	AC MOTOR CONTROLLER ASSY COMPLETE	36	2
9420109	WASHER FLAT M8, MS WITH NI PLATED	58	13
9420111	WASHER, LOCK, M8, SPRING STEEL(NICKEL PLATED)	58	14
9430105	MAIN CONTACTOR	36	4
9430105	MAIN CONTACTOR (ALBRIGHT)	84	1
9430126	LINK - MAIN CONTACTOR - EURO	84	2
9510001	SWITCH ASSY , PARKING BRAKE	6	16
9510006	SWITCH ASSY - REAR FOG LAMP	46	17
9510007	SWITCH ASSY - REAR DEFOGGER	46	19
9510105	SWITCH ,STOP LAMP	6	28

PART NO.	PART NAME	PAGE NO.	KEY NO
9510118	CAP - 12V SOCKET	46	34
9520001	THERMOSTAT ASSY - HEATER - DEFROSTER	70	23
9550004	POTENTIOMETER ASSY - ACCL.	6	37
9550008	POTENTIOMETER ASSY - BRAKE	6	46
9610000	HEAD LIGHT ASSY - REGULAR	32	12
9610005	ASSY. HEAD LIGHT WITH PARKING - EURO	32	12
9610101	BULB, HEADLAMP ,45/40 W	32	13
9610103	SPRING, HEAD LIGHT ASSY	32	15
9610115	BULB, HEAD LIGHT, 55 / 60 W	32	13
9620000	LAMP ASSY- FRONT COMBINATION	32	19
9620101	BULB, FRONT / REAR COMBINATION, 12V, 21/10 W	24	9
9620101	BULB, FRONT / REAR COMBINATION, 12V, 21/10 W	32	22
9621003	LAMP ASSY - DIRECTION INDICATOR - FRONT - LH	32	20
9622003	LAMP ASSY - DIRECTION INDICATOR - FRONT - RH	32	21
9640000	LIGHT ASSEMBLY, LICENSE PLATE	32	31
9640101	BULB, LICENSE LIGHT, 12V, 5 W	32	32
9650103	BULB TURN SIGNAL 12V, 21W	24	16
9651000	LIGHT ASSY, REAR COMBINATION-LH	24	3
9652000	LIGHT ASSY, REAR COMBINATION-RH	24	6
9661000	LIGHT ASSY, REAR TURN-LH	24	10
9662000	LIGHT ASSY, REAR TURN-RH	24	13
9670000	LIGHT ASSEMBLY, BACKUP	32	28
967000201	LIGHT ASSY. BACK UP "E" MARKED	32	28
9670101	BULB, BACKUP LIGHT, 12V,5W	32	29
9680026	SWITCH ASSY, FENR	46	15
9680101	DOME LIGHT	50	10
9680102	BULB, DOME LIGHT, 12V, 5W	50	11
9680130	PCB FENR REAR ILLUMINATION	46	13
969000101	LIGHT ASSY. REAR FOG LAMP - WITH 090 SERIES CONNECTOR	32	34
9700040	DOOR SWITCH ASSY	18	8
9700060	ASSY ANTENNAE - STEREO SYSTEM	78	3
9700071	STEREO ASSY - NIPPON	78	1
9700085	STEREO ASSY - KENWOOD	78	1
9700115	RELAY (SOLID STATE) (12V) - HEATER	70	24
9700130	CHIME, 12V	46	12
9700180	SPEAKER - 4" NIPPON	78	2
9700182	BRKT - STEREO SUPPORT	78	4
9700183	SPEAKER - 4" KENWOOD	78	2
9910113	BLADE FUSE - 3A - MINIATURE	58	18
9910114	BLADE FUSE 5A - MINIATURE	58	19
DA001015	EMI CORE ASSY - MOTOR / OUTPUT SIDE	90	4
DA001017	EMI CORE ASSY - BATTERY / INPUT SIDE	88	9
DA00940	TERMINAL BLOCK ASSY COMPLETE - MOTOR SIDE	90	5
DA00965	TERMINAL BLOCK ASSY COMPLETE- BATTERY SIDE	88	10

PART NO.	PART NAME	PAGE NO.	KEY NO
9120109	TUBING HEAT SHRINK BLACK.	58	8
9120110	PLASTIC CAPS FOR -VE TERMINAL	58	9
9130004	FAN ASSY - AC CONTROLLER & CHARGER COOLING	36	8
9130101	FAN, BATTERY VENTILLATION,	36	9
9150106	FLOAT	58	3
9150114	WATER LEVEL SENSOR	58	5
9150118	RUBBER GROMMET-WATER/TEMP SENSOR	58	17
9150132	END PLUG	58	7
9200031	CABLE ASSY - MOTOR GROUNDING	4	42
9200035	CABLE ASSY -AC TRACTION MOTOR GROUNDING	4	4
9210000	AC INDUCTION MOTOR ASSY	4	1
9210105	FLANGE - NON DRIVE END - AC INDUCTION MOTOR	56	1
9210106	DRIVE END FLANGE - AC INDUCTION MOTOR FOR FLEXI COUPLING	56	2
9210107	AC MOTOR CABLE	56	6
9210107	AC MOTOR CABLE	56	9
9210111	O" RING (DIA 15) - DRIVE END	56	3
9210111	O" RING (DIA 15) - DRIVE END	56	5
9240004	WIRING HARNESS - MAIN - AC DRIVE - RHD	60	4
9240008	WIRING HARNESS - LIGHTING - LHD	60	1
9240009	WIRING HARNESS LIGHTING AC DRIVE RHD	60	2
9240011	WIRING HARNESS - MAIN - AC DRIVE - LHD	60	3
9240015	WIRE HARNESS, DIAGNOSTIC PORT	48	8
9240022	REAR LIGHTING AND HEATER HARNESS - AC DRIVE - RHD	60	5
9240023	REAR LIGHTING AND HEATER HARNESS - AC DRIVE - LHD	60	6
9240060	PACK SENSE HARNESS ASSY	58	4
9240069	ASSY. CLAMP PLATE SENSOR BEARING	56	8
9240085	WIRING HARNESS HEATER END	70	22
9240160	SENSOR BATTERY TEMP	58	6
933000051	EMS ASSY - EURO	36	1
9340006	ASSY CHARGER-400 W COMPLETE - ACD	36	3
9380060	EMI CORE ASSY - BATTERY / INPUT SIDE	36	6
9380065	EMI CORE ASSY - MOTOR / OUTPUT SIDE	36	7
9380120	BUS BAR POSITIVE	88	8
9390126	STRAIN RELIEF - AC MOTOR CABLE	4	43
9420016	AC MOTOR CONTROLLER ASSY COMPLETE	36	2
9420109	WASHER FLAT M8, MS WITH NI PLATED	58	13
9420111	WASHER, LOCK, M8, SPRING STEEL(NICKEL PLATED)	58	14
9430105	MAIN CONTACTOR	36	4
9430105	MAIN CONTACTOR (ALBRIGHT)	84	1
9430126	LINK - MAIN CONTACTOR - EURO	84	2
9510001	SWITCH ASSY , PARKING BRAKE	6	16
9510006	SWITCH ASSY - REAR FOG LAMP	46	17
9510007	SWITCH ASSY - REAR DEFOGGER	46	19
9510105	SWITCH ,STOP LAMP	6	28
9510118	CAP - 12V SOCKET	46	34
9520001	THERMOSTAT ASSY - HEATER - DEFROSTER	70	23
9550004	POTENTIOMETER ASSY - ACCL.	6	37

PART NO.	PART NAME	PAGE NO.	KEY NO
9550008	POTENTIOMETER ASSY - BRAKE	6	46
9610000	HEAD LIGHT ASSY - REGULAR	32	12
9610005	ASSY. HEAD LIGHT WITH PARKING - EURO	32	12
9610101	BULB, HEADLAMP ,45/40 W	32	13
9610103	SPRING, HEAD LIGHT ASSY	32	15
9610115	BULB, HEAD LIGHT, 55 / 60 W	32	13
9620000	LAMP ASSY- FRONT COMBINATION	32	19
9620101	BULB, FRONT / REAR COMBINATION, 12V, 21/10 W	24	9
9620101	BULB, FRONT / REAR COMBINATION, 12V, 21/10 W	32	22
9621003	LAMP ASSY - DIRECTION INDICATOR - FRONT - LH	32	20
9622003	LAMP ASSY - DIRECTION INDICATOR - FRONT - RH	32	21
9640000	LIGHT ASSEMBLY, LICENSE PLATE	32	31
9640101	BULB, LICENSE LIGHT, 12V, 5 W	32	32
9650103	BULB TURN SIGNAL 12V, 21W	24	16
9651000	LIGHT ASSY, REAR COMBINATION-LH	24	3
9652000	LIGHT ASSY, REAR COMBINATION-RH	24	6
9661000	LIGHT ASSY, REAR TURN-LH	24	10
9662000	LIGHT ASSY, REAR TURN-RH	24	13
9670000	LIGHT ASSEMBLY, BACKUP	32	28
967000201	LIGHT ASSY. BACK UP "E" MARKED	32	28
9670101	BULB, BACKUP LIGHT, 12V,5W	32	29
9680026	SWITCH ASSY, FENR	46	15
9680101	DOME LIGHT	50	10
9680102	BULB, DOME LIGHT, 12V, 5W	50	11
9680130	PCB FENR REAR ILLUMINATION	46	13
969000101	LIGHT ASSY. REAR FOG LAMP-WITH 090 SERIES CONNECTOR	32	34
9700040	DOOR SWITCH ASSY	18	8
9700060	ASSY ANTENNAE - STEREO SYSTEM	78	3
9700071	STEREO ASSY - NIPPON	78	1
9700085	STEREO ASSY - KENWOOD	78	1
9700115	RELAY (SOLID STATE) (12V) - HEATER	70	24
9700130	CHIME, 12V	46	12
9700180	SPEAKER - 4" NIPPON	78	2
9700182	BRKT - STEREO SUPPORT	78	4
9700183	SPEAKER - 4" KENWOOD	78	2
9910113	BLADE FUSE - 3A - MINIATURE	58	18
9910114	BLADE FUSE 5A - MINIATURE	58	19
DA001015	EMI CORE ASSY - MOTOR / OUTPUT SIDE	90	4
DA001017	EMI CORE ASSY - BATTERY / INPUT SIDE	88	9
DA00940	TERMINAL BLOCK ASSY COMPLETE - MOTOR SIDE	90	5
DA00965	TERMINAL BLOCK ASSY COMPLETE- BATTERY SIDE	88	10
DA011183	EMI GROUNDING CABLE - MAIN	88	11
DA011266	CSK SCREW M4X0.7X10	88	12
DA011266	CSK SCREW M4X0.7X10	90	6
DA01970	MTG PLATE TERMINAL BLOCK MOTOR SIDE	90	7
DA01972	MTG PLATE TERMINAL BLOCK BATTERY SIDE	88	13

1.10 FRONT SUSPENSION ASSY LH/RH

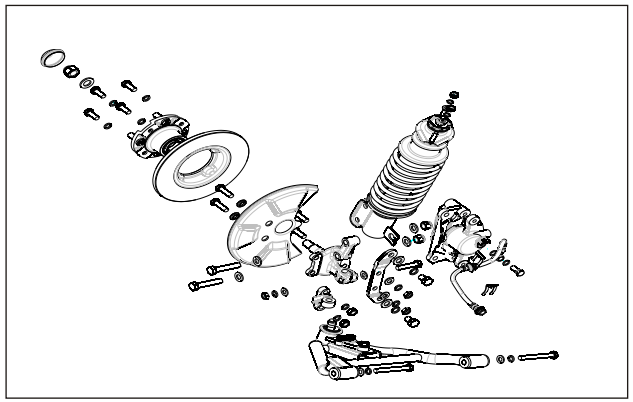

1.20 POWER TRAIN, REAR SUSPENSION ASSY

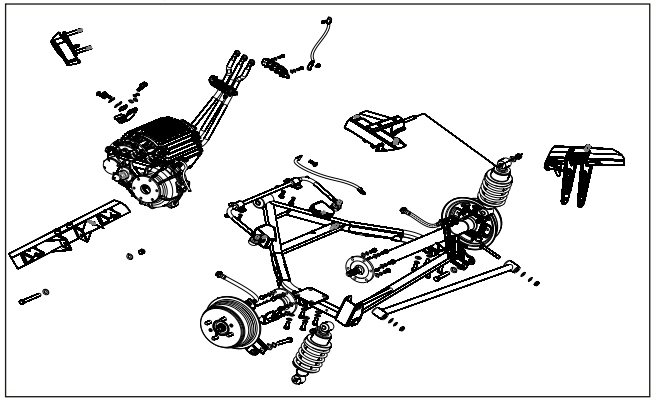

1.30 PEDAL BOX ASSY

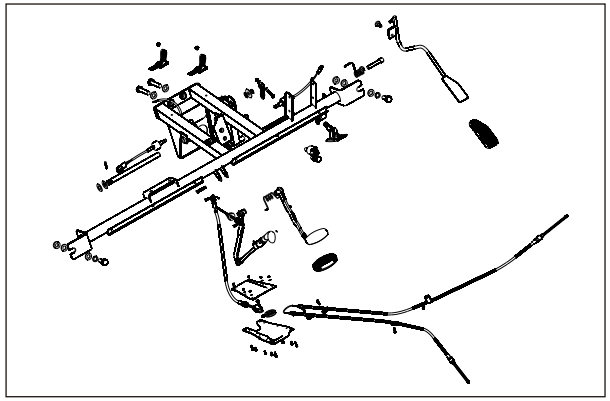

1.40 BRAKES

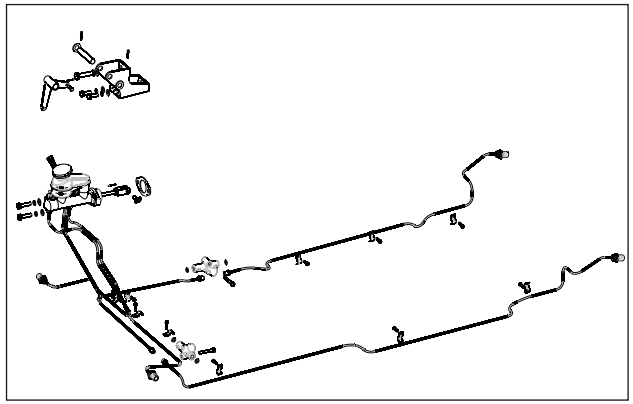

1.50 STEERING SYSTEM

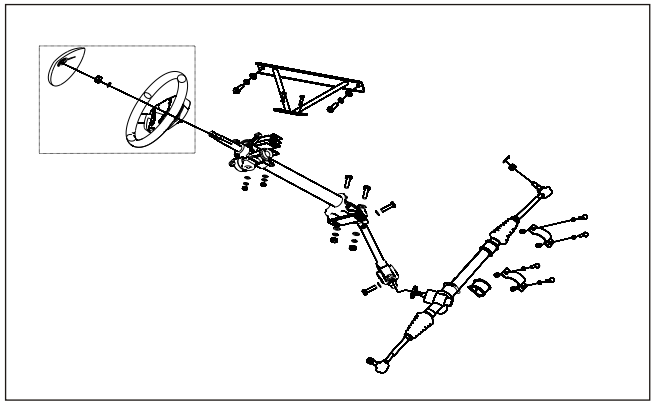

1.60 TRANSMISSION ASSY

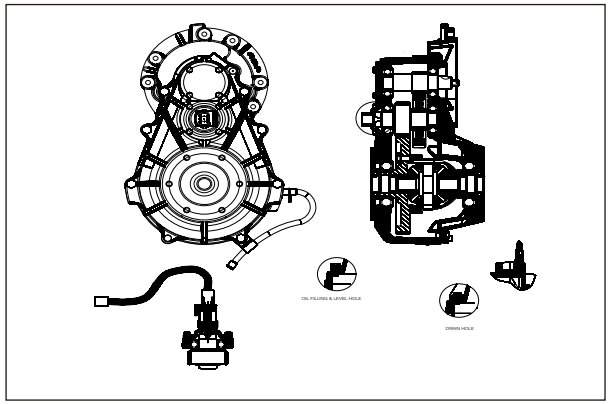

1.70 CHASSIS FRAME ASSY - MAIN

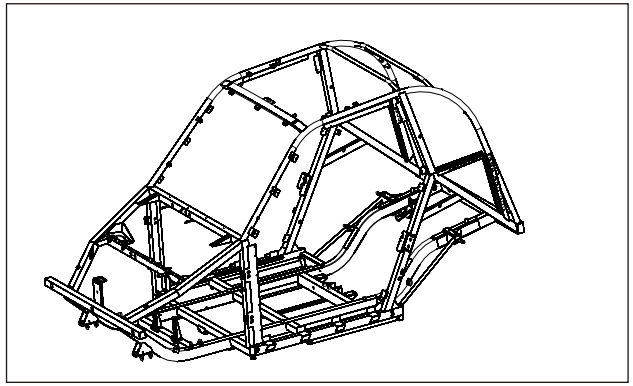

2.11 FRONT FENDER AND REAR QTR PANEL ASSY LH/RH

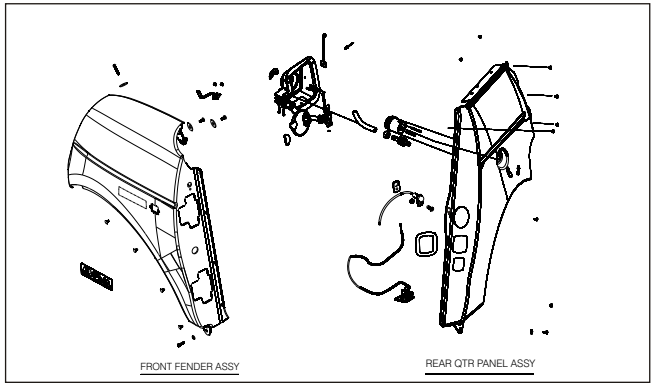

2.12 CANTRAIL PANEL ASSY LH/RH

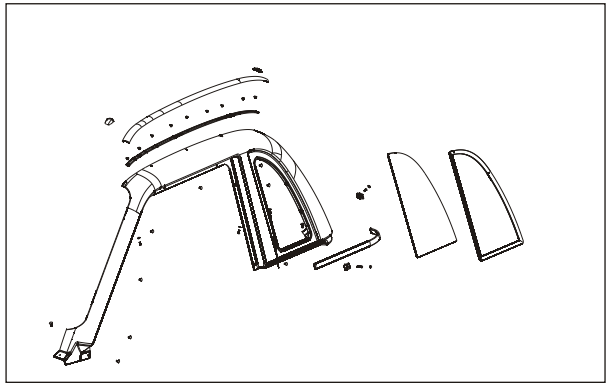

2.13 ROOF AND HOOD ASSY

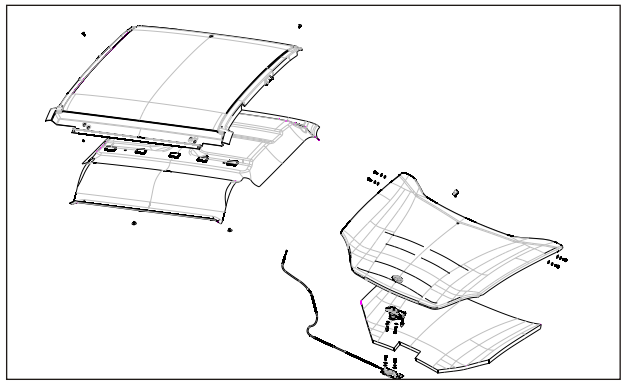

2.14 TAIL LIGHT PANEL ASSY

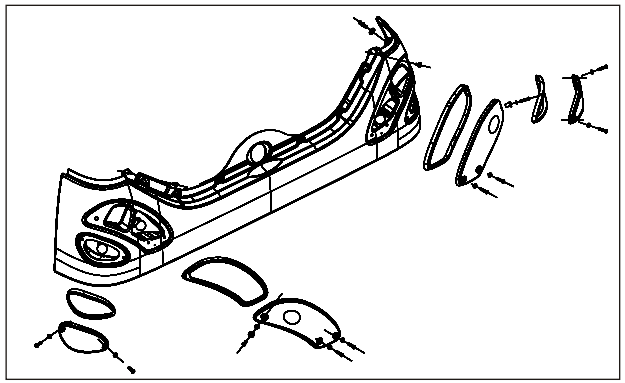

2.21 DOOR ASSY LH/RH

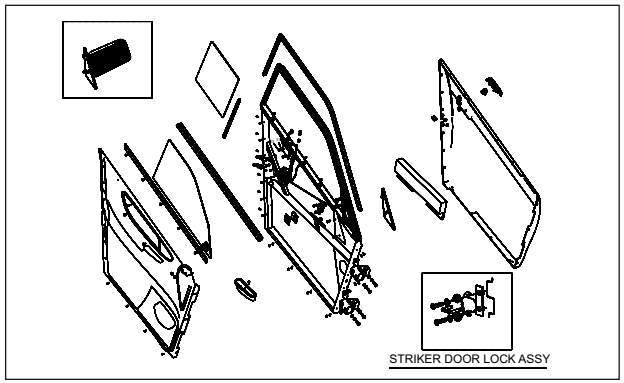

2.31 FRONT AND REAR BUMPER ASSY

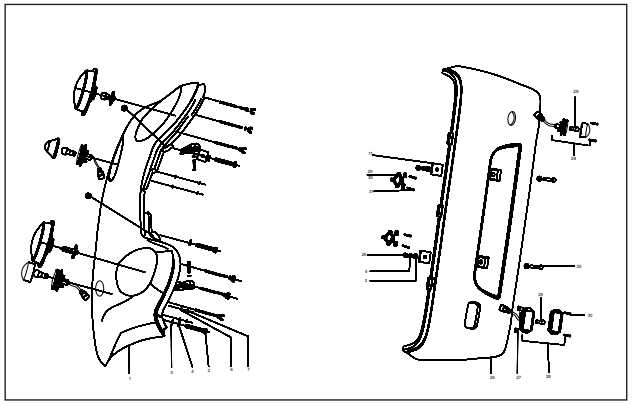

2.41 FIREWALL, FLOOR PANEL, BATTERY BOX LOWER & UPPER ASSY

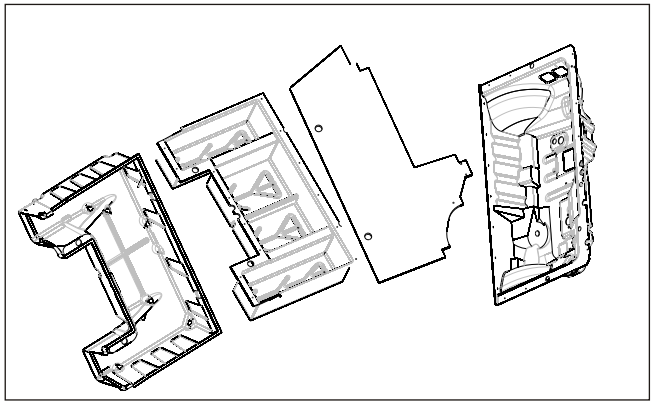

2.50 REAR TUB ASSY

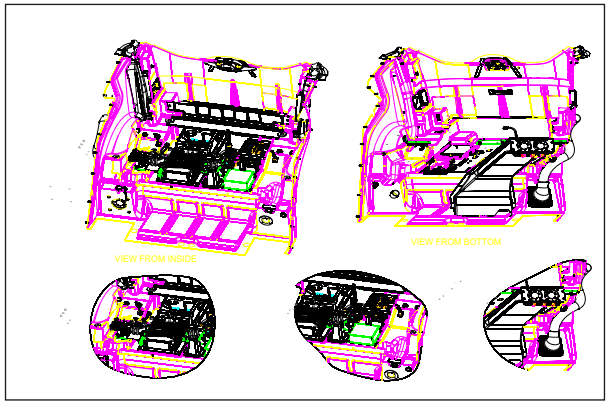

2.60 WHEEL WELL & ROCKER PANEL ASSY

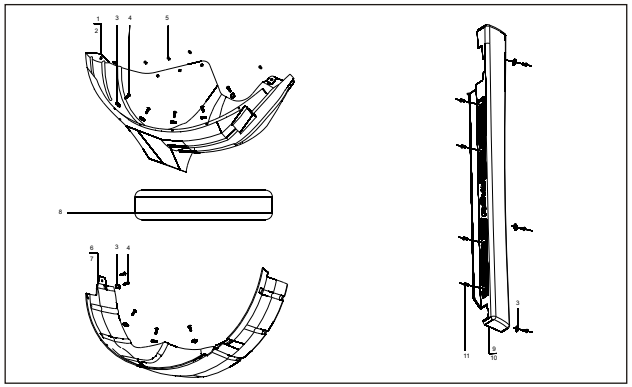

2.70 GLASS ASSY

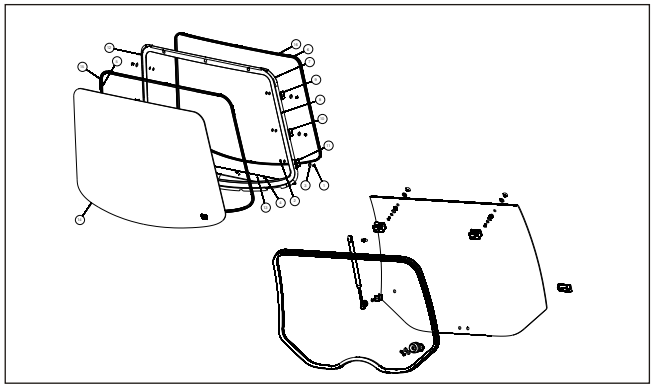

2.80 COWL ASSY

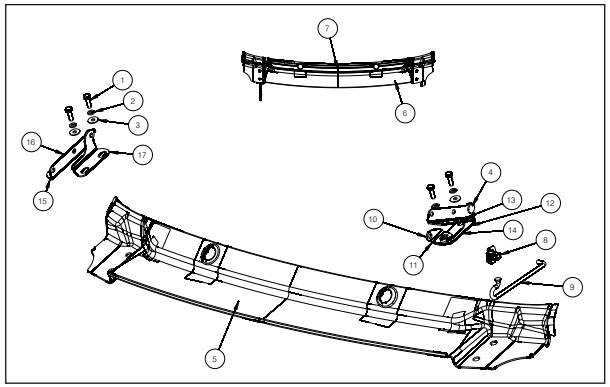

3.10 INSTRUMENT PANEL ASSY

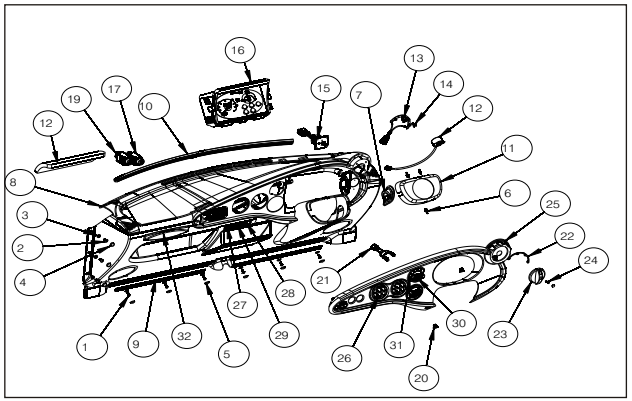

3.20 SEATS AND SEAT BELT ASSY

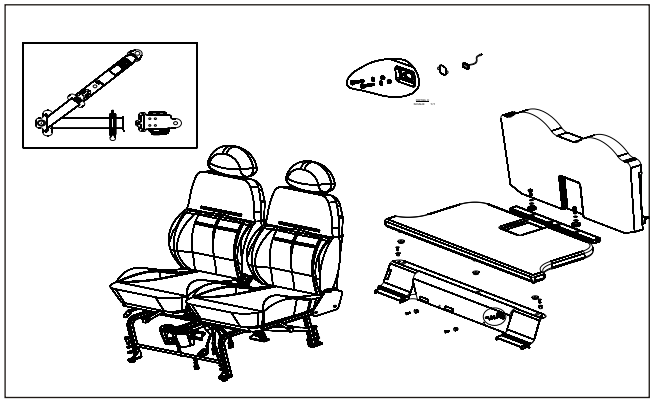

3.30 GREENHOUSE INTERIOR TRIM PANEL ASSY

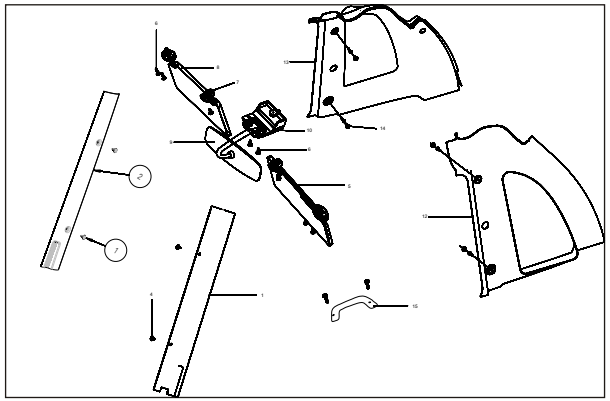

4.10 WIPER AND HORN ASSY

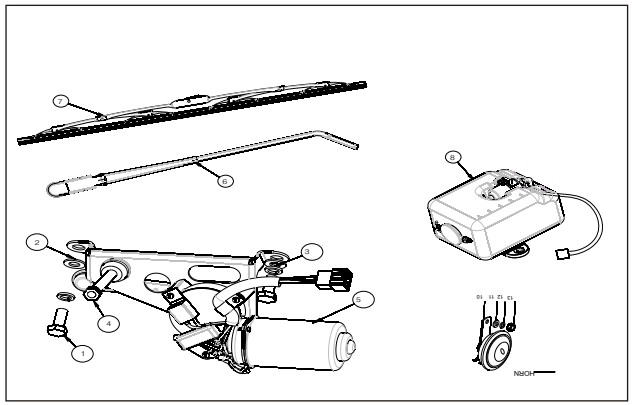

4.20 MOTOR ASSY

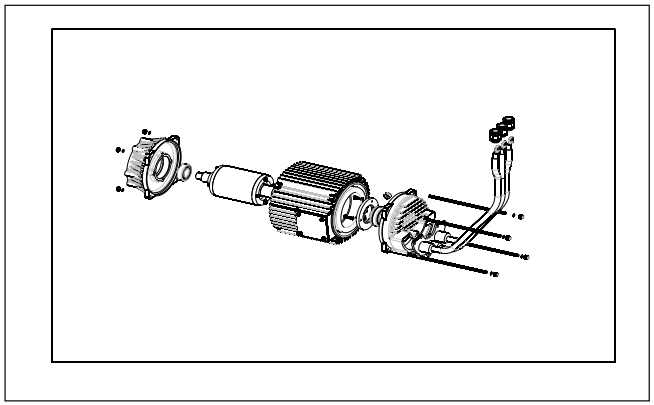

4.30 POWER PACK SYSTEM

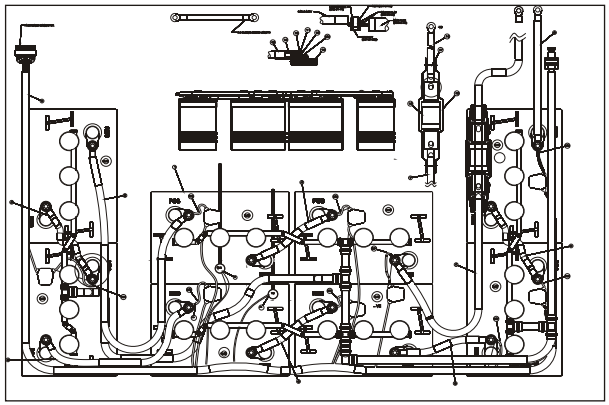

4.40 WIRE HARNESS

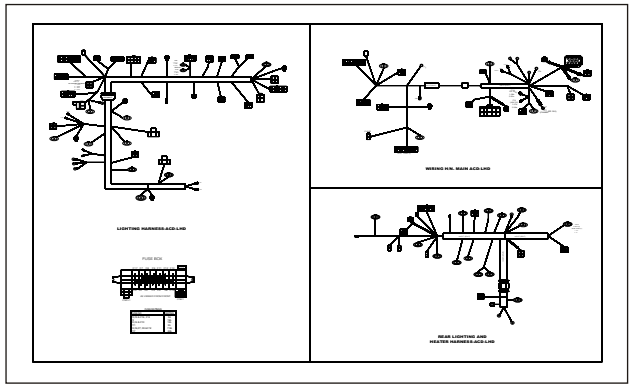

5.10 BLOWER ASSY COMPLETE

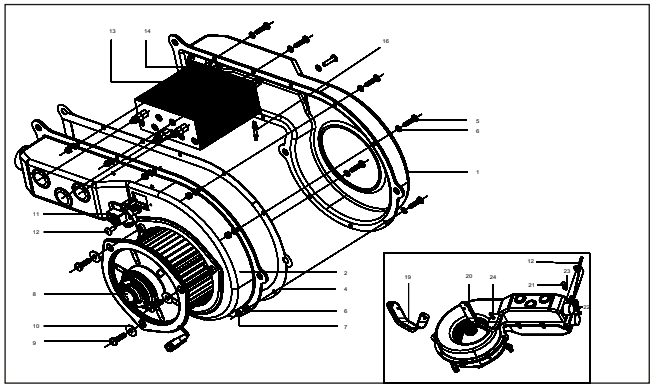

5.20 AIR CONDITIONING ASSY

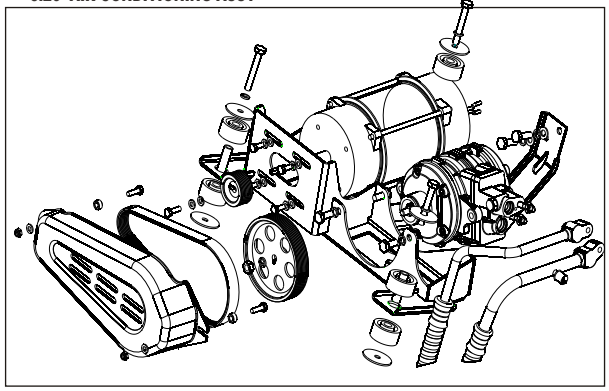

6.10 MATS & CHARGE PORT HANDLE ASSY

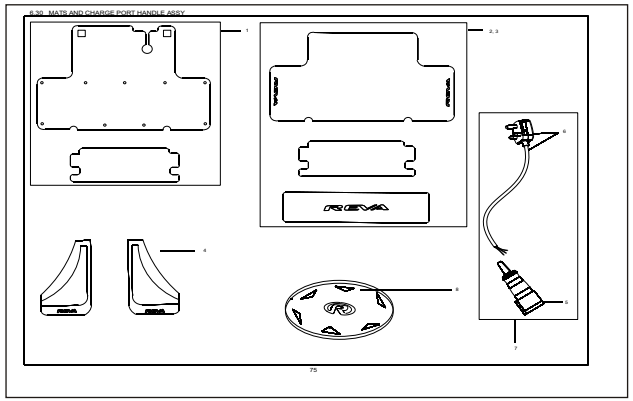

6.20 CENTRAL DOOR LOCKING SYSTEM

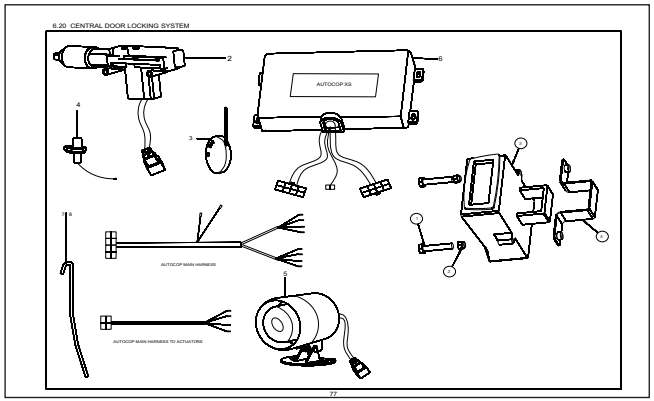

6.30 ASSY STEREO SYSTEM

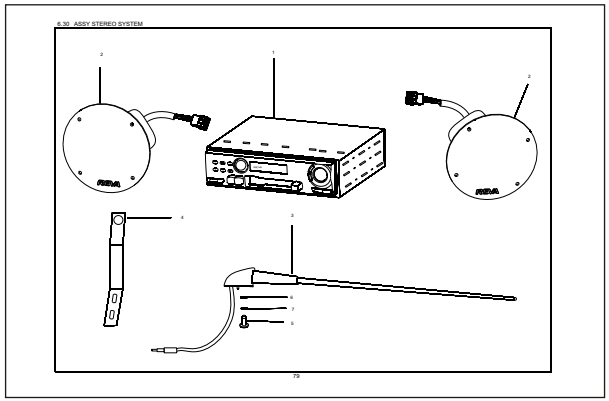

6.40 WHEELS AND SPARE ASSY

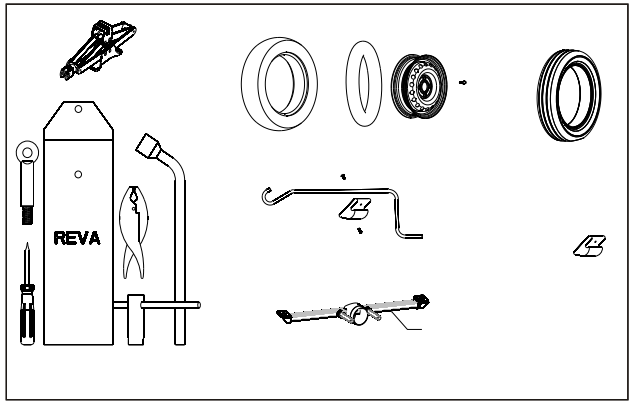

6.50 DECALS

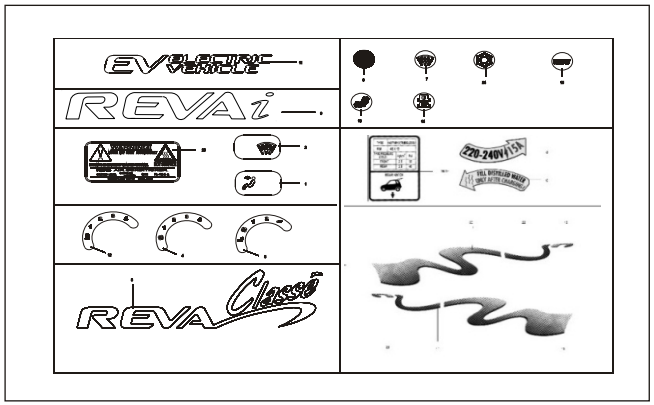

6.60 CONTACTOR

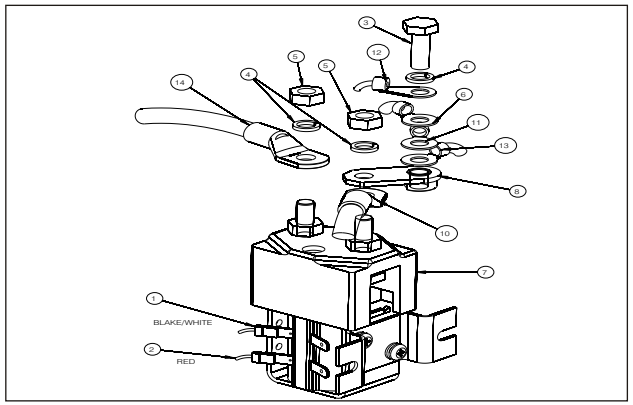

6.70 BODY-KITS PARTS

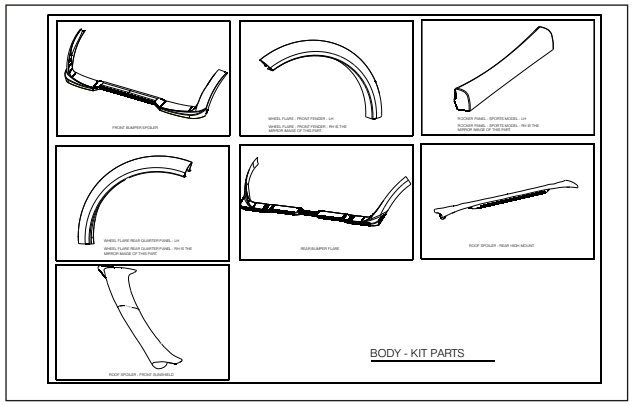

6.80 INPUT EMI-

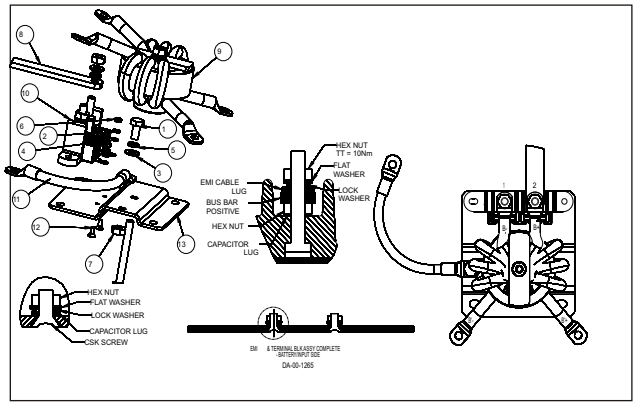

6.90 OUT PUT EMI

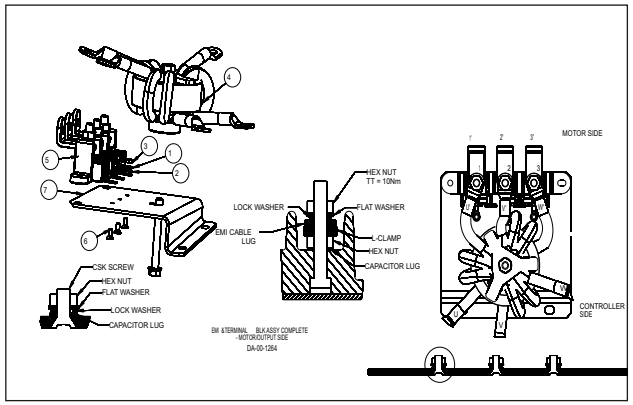

GROUP NO INDEX

1. CHASSIS
2. BODY AND EXTERIOR
3. INTERIOR
4. ELECTRICALS AND ELECTRONICS
5. HEATER AND AIR CONDITIONER
6. ACCESSORIES

1. CHASSIS

1.10 FRONT SUSPENSION ASSY LH/RH
1.20 POWER TRAIN, REAR SUSPENSION ASSEMBLY
1.30 PEDALBOX ASSY
1.40 BRAKES
1.50 STEERING SYSTEM
1.60 TRANSMISSI ON ASSY
1.70 CHASSIS FRAME ASSY--MAIN

2. BODY & EXTERIOR

2.10 BODY PANELS
- 2.11 Front Fender And Rear Qtr Panel Assembly-LH/RH
- 2.12 C antrail Assembly-LH/RH
- 2.13 R oof &Hood Assembly
- 2.14 T ail light panel assembly

2.20 DOORS
- 2.21 D oor Assembly-LH/RH

2.30 BUMPER ASSY
- 2.31 Front & Rear Bumper Assembly

2.40 INTERIOR BODY
- 2.41 Fire wall,Floor panel,Battery box lower&upper Assembly

2.50 REAR TUB ASSY

2.60 WHEEL WELL & ROCKER PANEL ASSY

2.70 GLASS ASSY

2.80 COWL ASSY

3. INTERIORS

3.10 INSTRUMENT PANEL ASSY

3.20 SEATS & SEAT BELT ASSY

3.30 GREEN HOUSE INTERIOR TRIM PANEL ASSY

4. ELECTRICALS AND ELECTRONICS

4.10 WIPER AND HORN ASSY

4.20 MOTOR ASSY

4.30 POWER PACK SYSTEM

4.40 WIRE HARNESS

5. HEATER AND AIR-CONDITIONING

5.10 BLOWER ASSY COMPLETE

5.20 AIR CONDITIONING ASSY COMPLETE

6. ACCESSORIES

6.10 MATS & CHARGE PORT HANDLE ASSY
- 6.11 Floor Mat- Regular
- 6.12 Floor Mat-Deluxe
- 6.13 Carpet Assembly Front -Regular
- 6.14 Mud Flaps
- 6.15 Wheel caps

6.20 CENTRAL DOOR LOCKING SYSTEM (AUTOCOP)

6.30 ASSY STEREO SYSTEM

6.40 WHEELS AND SPARE ASSY

6.50 DECALS

1 **CHASSIS**

1.10 FRONT SUSPENSION ASSY LH/RH

1.20 POWER TRAIN, REAR SUSPENSION ASSEMBLY

1.30 PEDALBOX ASSY - REGULAR

1.40 BRAKES

1.50 STEERING SYSTEM

1.60 TRANSMISSION ASSY

1.70 CHASSIS FRAME ASSY- -MAIN

1.10 FRONT SUSPENSION ASSY LH/RH

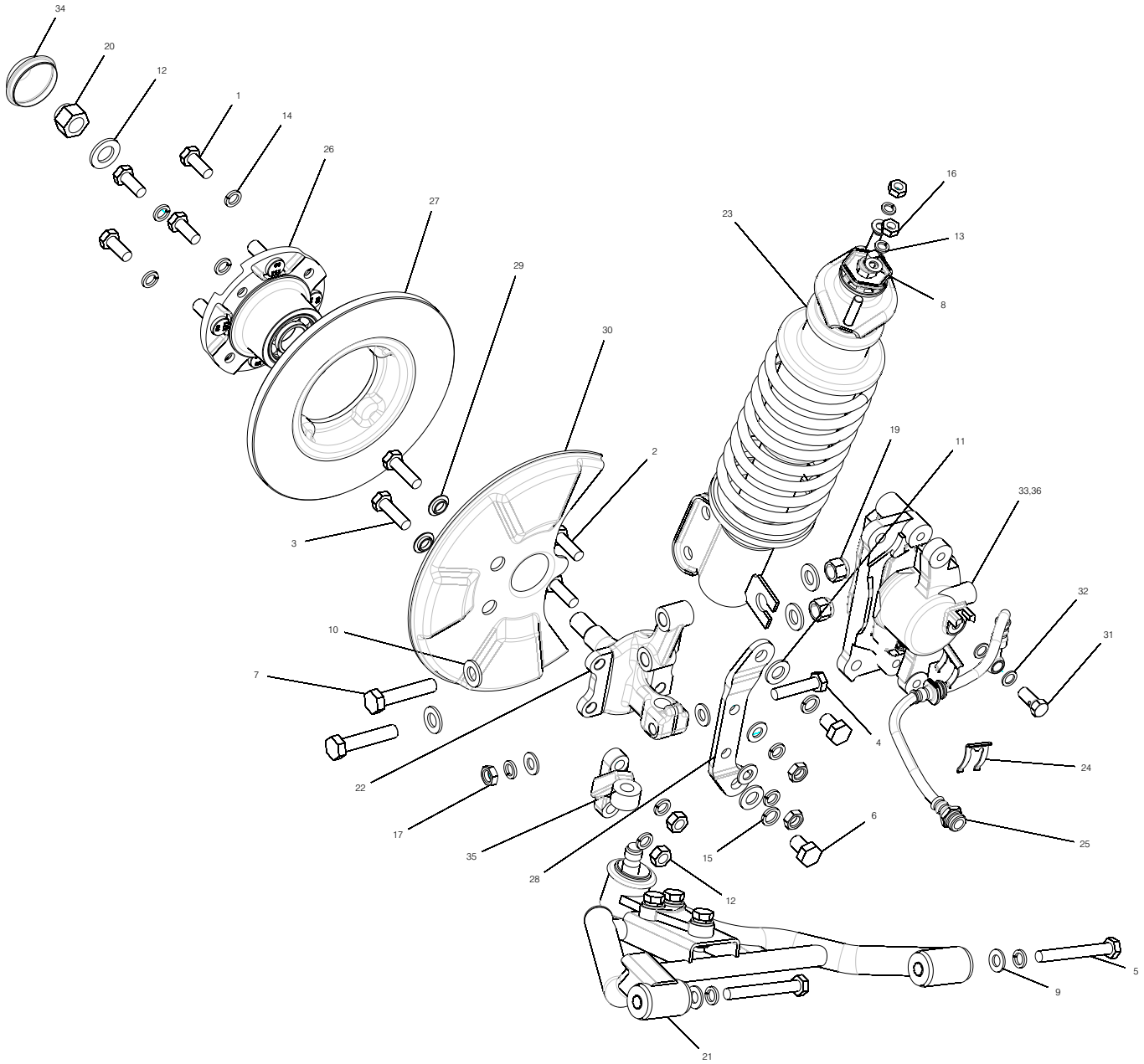

SL NO	PART NO		DESCRIPTION	QTY.	REMARKS
1	015-01-26		BOLT, HEX, M10 X 1.25X 25	4	
2	015-01-30		BOLT, HEX, M10 X 1.50 X 30	2	38±2 TT - NM
3	015-01-36		BOLT, HEX, M10 X 1.25 X 35	2	34±2
4	015-01-46		BOLT, HEX, M10 X 1.50 X 45	1	36±2
5	015-01-80		BOLT, HEX, M10 X 1.50 X 80	2	34±2
6	016-01-20		BOLT, HEX, M12 X 1.25 X 20	2	34±2
7	016-01-60		BOLT, HEX, M12 X 1.75 X 60	2	63±2
8	021-01-08		WASHER, FLAT, M8	2	60±2
9	021-01-10		WASHER, FLAT, M10	6	
10	021-01-12		WASHER, FLAT, M12	4	
11	021-01-13		WASHER, FLAT, M12 MACHINED	2	
12	021-01-16		WASHER, FLAT, M16	1	
13	022-01-08		WASHER, LOCK, M8	2	
14	022-01-10		WASHER, LOCK, M10	11	
15	022-01-12		WASHER, LOCK, M12	2	
16	031-01-08		NUT, HEX, M8 X 1.25	2	
17	031-01-10		NUT, HEX, M10 X 1.50	3	
12	031-01-11		NUT, HEX, M10 X 1.25	2	
19	032-01-12		NUT, NYLOCK, M12 X 1.75	2	12±2
20	032-01-16		NUT, NYLOCK, M16 X 1.5	1	225±5
21	111-10-00		A-ARM ASSY-LH	1	
22	112-11-01		UP RIGHT-LH	1	60±2
23	113-00-00		FRONT STRUT ASSY	1	
24	221-01-03		E-RING	2	
25	221-01-08		FLEXIBLE HOSE - FRONT DISC BRAKE	1	
26	230-00-20		HUB ASSY-FRONT WHEEL	1	
27	230-01-01		DISC - FRONT BRAKE	1	
28	230-01-02		MTG BRACKET - CALIPER ASSY	1	
29	230-01-03		COLLARED BUSH	2	
30	230-01-04		DUST COVER - FRONT DISC BRAKE	1	
31	230-01-06		BANJO BOLT	1	
32	230-01-07		ALUMINIUM WASHER	2	
33	230-10-00		CALLIPER ASSY- FRT DISC BRAKE - LH	1	
34	271-01-35		GREASE CAP	1	
35	310-11-40		STEERING ARM - LH	1	
36	230-20-00		DISC CALIPER ASSY. RH	1	
21	112-20-01		A-ARM WELDMENT - RH	1	
22	112-21-01		UPRIGHT - RH	1	
35	310-21-40		STEERING ARM - RH	1	

L =LEFT HAND DRIVE
R=RIGHT HAND DRIVE

1.20 POWERTRAIN,REAR SUSPENSION ASSY

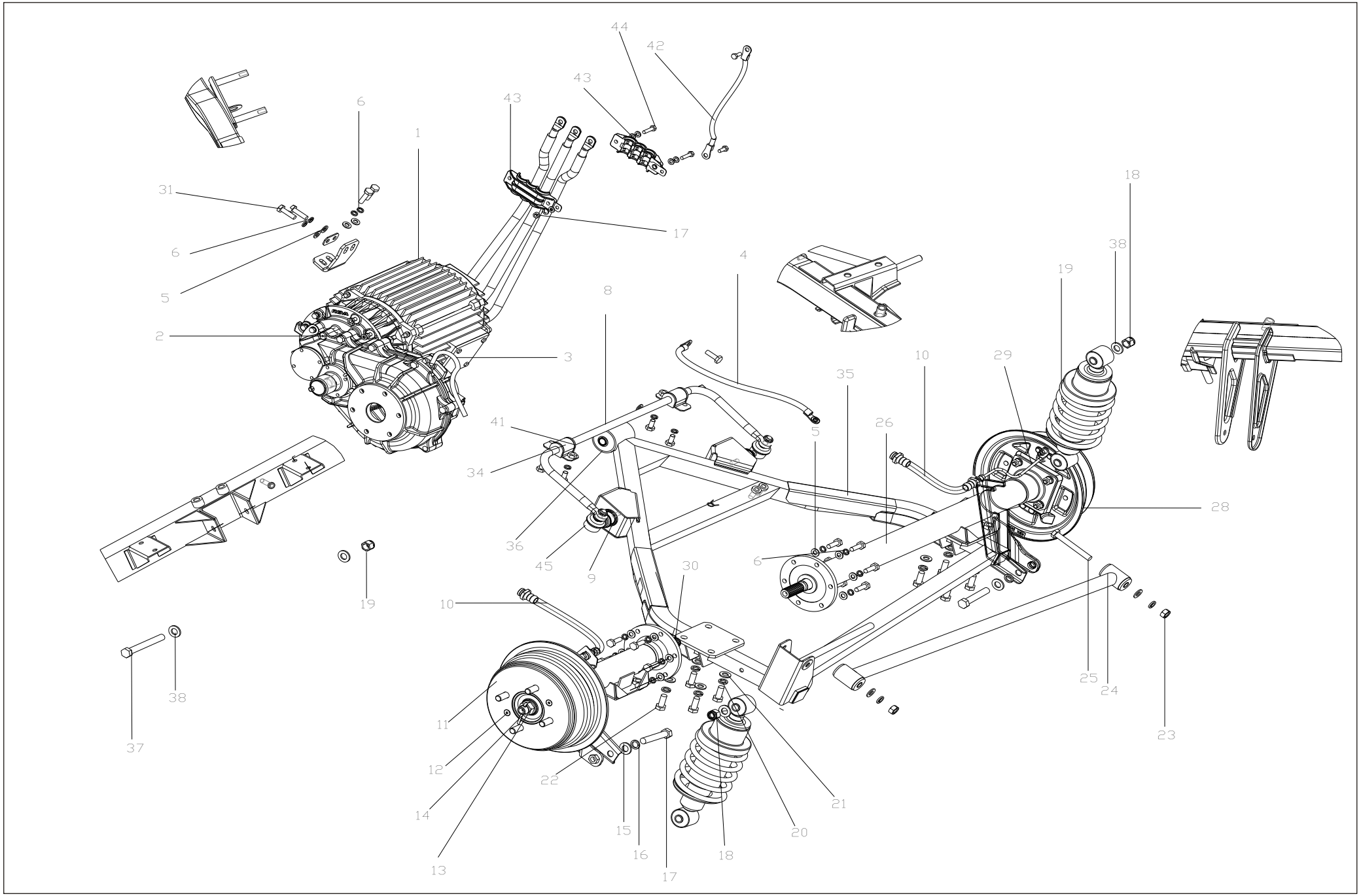

KEY NO	PART NO.	PART NAME	QTY
1	9210000	AC INDUCTION MOTOR ASSY (FOR FLEXI COUPLING) - KEC	1
2	4120080	TRANSMISSION ASSEMBLY - 9.4 RATIO (FLEXIBLE COUPLING)	1
3	4120004	BREATHER ASSY - TRANSMISSION	1
4	9200035	CABLE ASSY -AC TRACTION MOTOR GROUNDING	1
5	0210108	WASHER, FLAT, M8	20
6	0220108	WASHER, LOCK M8	20
7	0140125	BOLT, HEX, M8 X 1.25 X 25	
8	1230105	ANTI-ROLL BAR	1
9	1230109	BUSH BALL JOINT MTG - ANTI ROLL BAR	2
10	2210101	HOSE, BRAKE-HYD	2
11	2720101	BRAKE DRUM REAR MACHINED (BLACK PAINTED)	2
12	0180190	SOCKET SCREW CSK HEAD M6 X 1X 12 - IS 6761	4
13	0370116	NUT, CASTLE , M16 X 1.5	16
14	0810106	SPLIT PIN 4X40	2
15	0210113	WASHER, FLAT, M12, MACHINED	2
16	0220112	WASHER, LOCK M12	2
17	0160165	BOLT, HEX, M12 X 1.75 X 65 (1/2 THREAD)	2
18	0320112	NUT, NYLOCK, M12 X 1.75	3
19	1210010	SHOCK ABSORBER ASSY - REAR	2
20	0220110	WASHER, LOCK M10	8
21	0210110	WASHER, FLAT, M10	8
22	0150125	BOLT, HEX, M10 X 1.50 X 25	1
23	0310110	NUT, HEX, M10 X1.50	2

KEY NO	PART NO.	PART NAME	QTY
24	4160001	PANHARD ROD	1
25	0150180	BOLT, HEX, SELF CENTERING,M10 X 1.5 X 80	2
26	4112007	REAR AXLE WELDMENT - RH - ACD	1
27	4112160	DRIVE SHAFT - RH	1
28	2622002	BRAKE ASSEMBLY REAR RH (WITH ASBESTOS FREE LINING)	1
29	2222119	BUNDY REAR RH-HOSE TO BACK PLATE	1
30	4111161	DRIVE SHAFT - LH	1
31	0140130	BOLT, HEX, M8 X 1.25 X 30	12
32	4150036	WELDMENT-TRACTION MOTOR GUARD	1
33	4111003	REAR AXLE WELDMENT - LH	1
34	1230006	CLAMP WELDMENT - ANTI ROLL BAR	2
35	4150005	TRAILING ARM WELDMENT - ACD	1
36	4110193	BUSHING TRAILING ARM	1
37	0160100	BOLT HEX,SELF CENTERING, M12 X 1.75 X 100	1
38	0210112	WASHER, FLAT, M12, PUNCHED	2
39	2621002	BRAKE ASSEMBLY REAR LH (WITH ASBESTOS FREE LINING)	1
40	2221119	BUNDY REAR LH-HOSE TO BACK PLATE	1
41	1230107	BUSH - ANTI ROLL BAR MTG	1
42	9200031	CABLE ASSY - MOTOR GROUNDING	1
43	9390126	STRAIN RELIEF - AC MOTOR CABLE	2
44	0130116	BOLT, HEX, M6 X 1.0 X 16	2
45	1230108	BALL JOINT - ANTI ROLL BAR	2

L =LEFT HAND DRIVE
R=RIGHT HAND DRIVE

1.30 PEDAL BOX ASSY

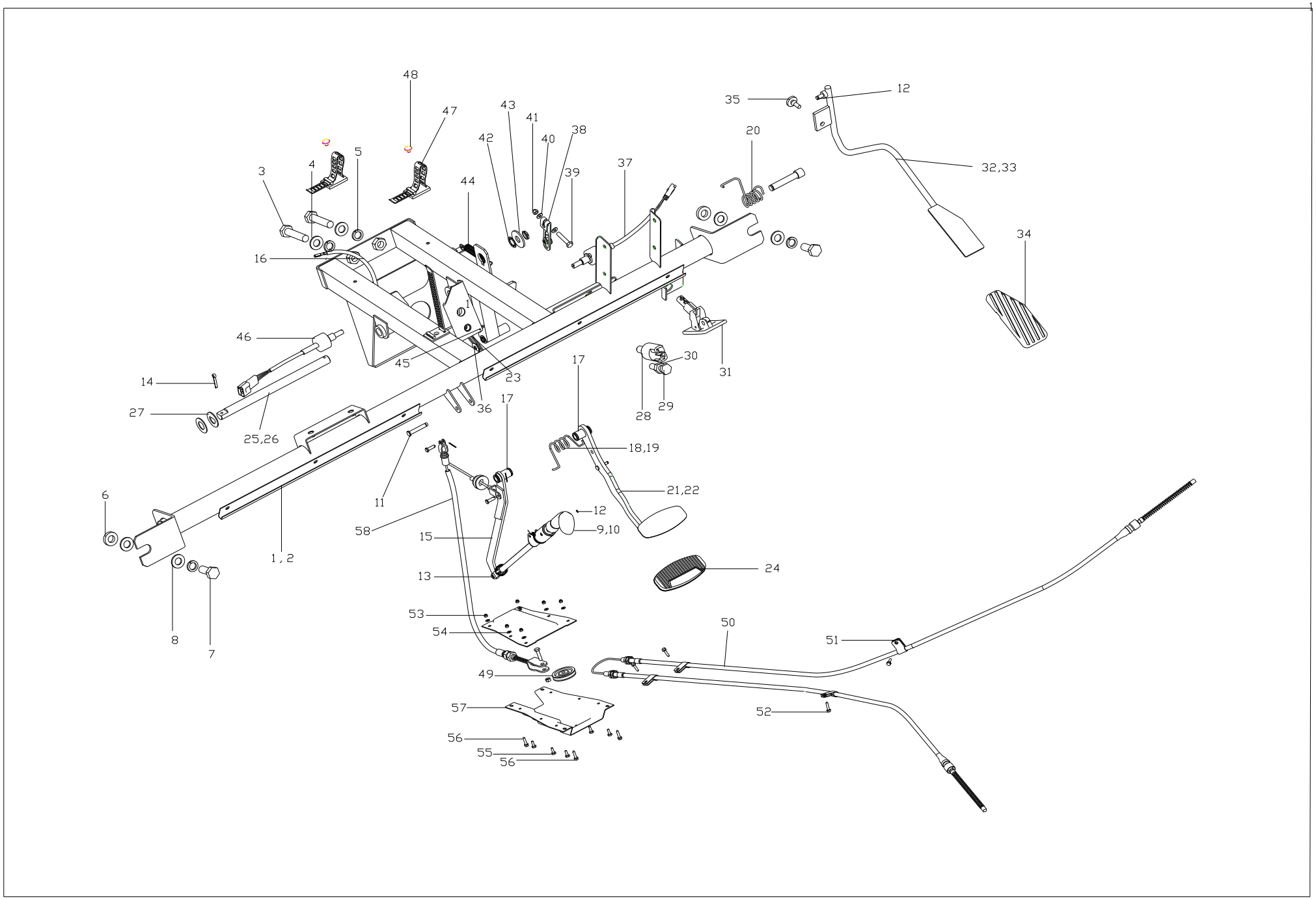

KEY NO	PART NO.	PART NAME	QTY
1	5310050	PEDAL BOX WELDMENT	1
2	5310010	PEDAL BOX WELDMENT - LHD	1
3	0150146	BOLT, HEX, M10 X 1.50 X 45	2
4	0210110	WASHER, FLAT, M10	2
5	0220110	WASHER, LOCK M10	4
6	2000103	SPACER - PEDAL BOX MTG	2
7	0150125	BOLT, HEX, M10 X 1.50 X 25	2
8	0230110	WASHER FLAT, LARGE OD M10	2
9	2450010	PARK BRAKE HANDLE ASSY - STD	1
10	2450030	PB LEVER WELDMENT - LHD	1
11	2450106	CLEVIS PIN - PB HANDLE	1
12	0910103	CIRCLIP C-3.2	3
13	0810113	CLEVIS PIN-PB LEVER-PB HANDLE	1
14	0810107	SPLIT PIN 3.2 X 20, IS:549-1974	2
15	2450001	PB LEVER WELDMENT - RHD	1
16	9510001	SWITCH ASSY , PARKING BRAKE	1
17	2510106	NYLON BUSHING, BRAKE ARM	4
18	2500105	RETURN SPRING, BRAKE ARM	1
19	2500115	RETURN SPRING - BRAKE ARM - LHD	
20	4310109	SPRING-ACCEL- ROD	1
21	2510015	BRAKE ARM WELDMENT	1
22	2510025	BRAKE ARM WELDMENT - LHD	1
23	2600107	LEVER - BRAKE POT	1
24	2510110	PAD BRAKE PEDAL	1
25	2000115	PIVOT PIN - PEDAL BOX - RHD	1
26	2000116	HINGE PIN - PEDAL BOX - LHD	1
27	0210112	WASHER, FLAT, M12, PUNCHED	2
28	9510105	SWITCH ,STOP LAMP	1
29	0140135	BOLT HEX,FULL THREAD, M8 X 1.25 X 35	1
30	0310108	NUT, HEX, M8 X 1.25	2

KEY NO	PART NO.	PART NAME	QTY
31	8710101	HOOD RELEASE LEVER	1
32	4310020	ACCL ROD WLDMT	1
33	4310014	ACCELERATOR ROD WELDMENT - LHD	1
34	4310108	PAD - ACCEL. PEDAL	1
35	4310107	RUBBER STOPPER ACC PEDAL	1
36	0910107	CIRCLIP C-7	1
37	9550004	POTENTIOMETER ASSY - ACCL.	1
38	4320112	LEVER POTENTIOMETER	1
39	0120125	BOLT, HEX, M4X0.7X25	2
40	0210104	WASHER, FLAT, M4	4
41	0320104	NUT, NYLOCK, M4 X .7	2
42	2510109	NYLON BUSHING, POT LINK	2
43	0230105	WASHER FLAT M5, LARGE	3
44	4310110	RETURN SPRING ACCL POT	1
45	2520111	SPRING BRAKE LINK	1
46	9550008	POTENTIOMETER ASSY - BRAKE	1
47	9090111	CABLE TIE MOUNT, ACC1 (S) SHORT	2
48	0410101	RIVET, POP, 4X8X15.5 L, NORMAL DOME HEAD	2
49	2410102	PULLEY-PB CABLE JOINT	1
50	2410001	CABLE ASSY PB-SECONDARY	1
51	0820127	CLIP,PB-CABLE	4
52	0130125	BOLT, HEX, M6 X 1.0 X 25	1
53	0320104	NUT, NYLOCK, M4 X .7	6
54	0210104	WASHER, FLAT, M4	6
55	0120112	BOLT, HEX, M4 X 0.7 X 12	6
56	0530120	HEX HEAD SELF DRILLING SCREW 4.2 X 19	4
57	2410111	DUST COVER-PB	1
58	2410009	CABLE ASSY PB-PRIMARY	1
59	0140125	BOLT, HEX, M8 X 1.25 X 25	1
60	2000122	P-CLAMP-PB CABLE SECONDARY	4

L =LEFT HAND DRIVE
R=RIGHT HAND DRIVE

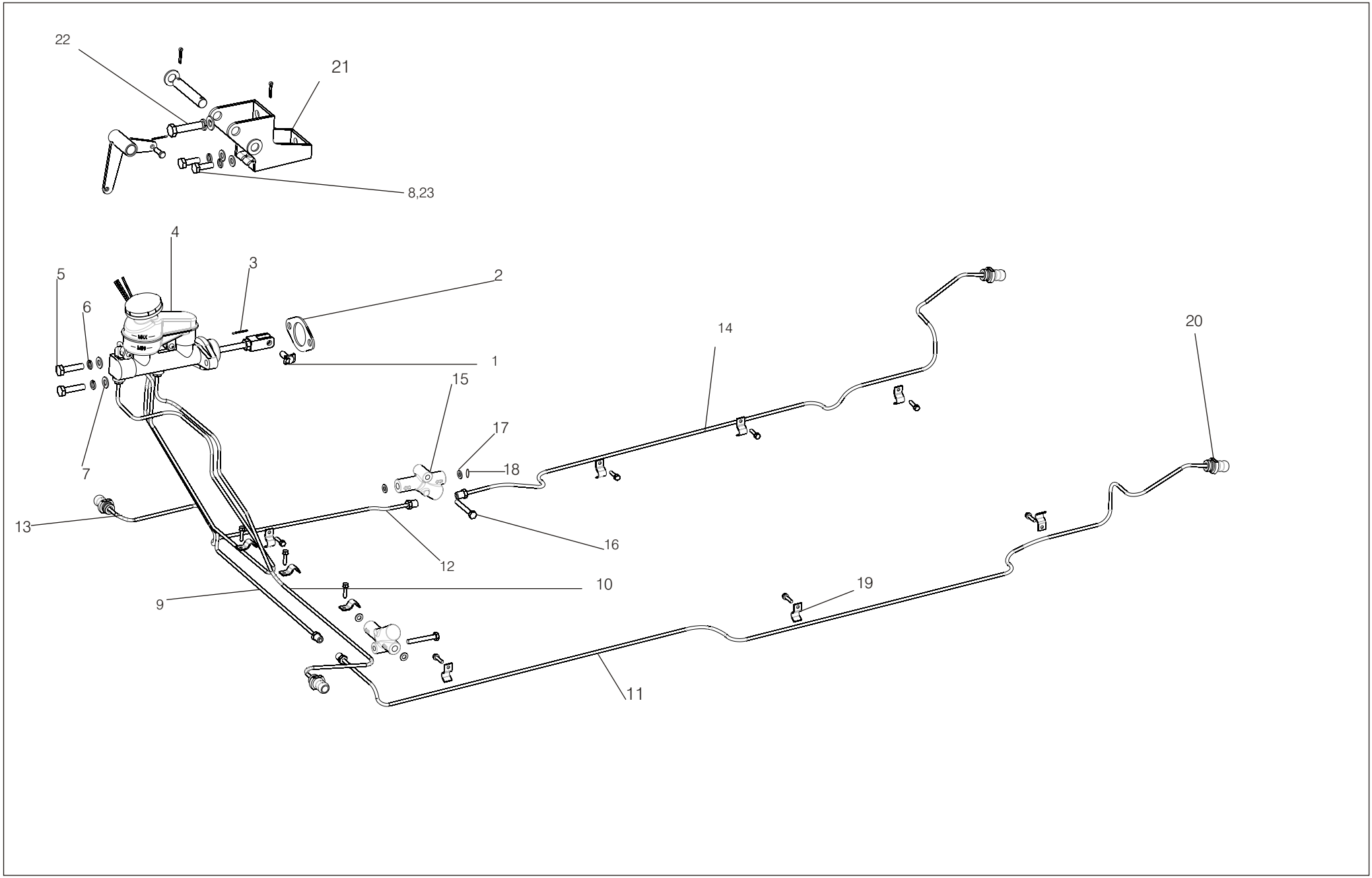
22
21
8,23
4
3
5
2
6
14
20
1
15
17
7
18
13
16
12
10
9
19
11

KEY NO	PART NO	PART NAME	QTY	REMARKS
		HYDRAULIC		
1	251 01 20	CLEVIS PIN MASTER CYLINDER	1	
2	210 01 10	GASKET MASTER CYLINDER	1	
3	081 01 01	SPLIT PIN M2.5x25	1	
4	210 01 00	MASTER CYLINDER	1	
5	014 01 35 B	BOLT HEX M8x1.25x35	2	
6	022 01 08 A	WASHER LOCK M8	2	
7	021 01 08	WASHER FLAT M8	2	
8	013 01 25	BOLT, HEX, M6 X 1.0 X 25	2	
9	222 11 10 B	BUNDY, MC TO HOSE (FRONT)-LH	1	
10	222 11 11 B	BUNDY MC TO PV LEFT	1	
11	222 11 16 C	BUNDY, PV to HOSE (REAR), LH	1	
12	222 21 10 B	BUNDY, MC TO HOSE (FRONT), RH	1	
13	222 21 11 B	BUNDY, MC TO PV RIGHT	1	
14	222 21 16 C	BUNDY, PV to HOSE (REAR), RH	1	
15	230 01 00	PROPORTIONATING VALVE	2	
16	013 01 45	BOLT HEX M6x1x45	2	
17	022 01 06 A	WASHER LOCK M6	2	
18	021 01 06 A	WASHER FLAT M6	2	
19	063 01 15	BRAKE FLUID	11	
20	221 01 03	E-RING	2	
		PARKING BRAKE		
21	243 00 01 C	PB LINKAGE ASSY	1	
22	015 01 45	BOLT HEX M10x1.5x45	1	
23	013 01 30	BOLT HEX M6X1X30 (LHD)	2	

L =LEFT HAND DRIVE
R=RIGHT HAND DRIVE

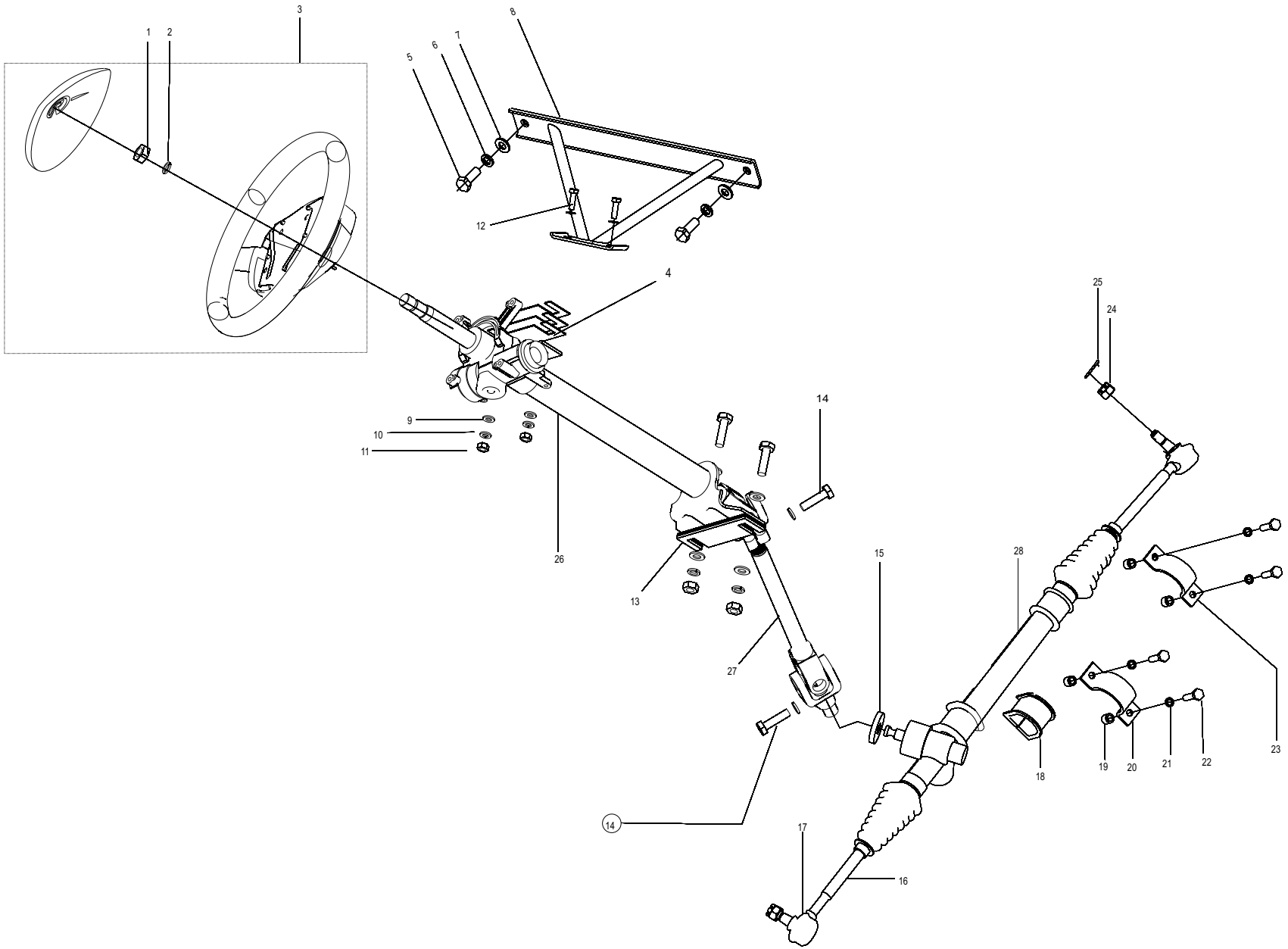
1
2
3
4
5
6
7
8
9
10
11
12
13
14
14
15
16
17
18
19
20
21
22
23
24
25
26
27
28

DESCRIPTION			REMARKS
KEY NO	PART NO	PART NAME	QTY	
1	031 01 25 A	NUT, HEX, JAM, M12 x 1.25	1	
2	022 01 12 A	WASHER, LOCK M12	1	
3	330 01 01	STEERING WHEEL (REGULAR)	1	REGULAR
3	331 01 01	STEERING WHEEL - LEATHER WRAPPED	1	LEATHER
4	320 01 13	SHIM UPPER- Steering Column, SHORT	3	
5	015 01 25	BOLT, HEX, M10 X 1.50 X 25	2	
6	022 01 10 A	WASHER, LOCK M10	2	
7	021 01 10 A	WASHER, FLAT, M10	2	
8	321 00 00 D	ST COLUMN SUPPORT ASSY	1	
9	021 01 06 A	WASHER, FLAT, M6	6	
10	022 01 06 A	WASHER, LOCK M6	2	
11	031 01 06 A	NUT, HEX, M6 x 1.0	2	
12	013 01 25	BOLT, HEX, M6 x 1.0 x 25	2	
13	320 01 14	SHIM LOWER-Steering Column, LONG	3	
14	014 01 30	BOLT, HEX, M8 x 1.25 x 30	2	
15	310 01 35	SEAL GASKET, RACK	1	
16	310 01 03	STEERING TIE ROD	2	
17	310 01 05	STEERING TIE-ROD END BALL JOINT	2	
18	310 01 30	RUBBER MOUNT PINION SIDE	1	
19	310 01 10	SPACER RACK MOUNT	4	
20	310 01 02	BRACKET- STEERING PINION SIDE	1	
21	022 01 08 A	WASHER, LOCK M8	7	
22	014 01 35	BOLT, HEX, M8 x 1.25 x 35	4	
23	310 01 01	BRACKET - STEERING RACK SIDE	1	
24	037 01 12	CASTLE NUT, M12 X 1.25	2	
25	081 01 01	SPLIT PIN M2.5 X 25	2	
26	320 00 01 B	STEERING COLUMN ASSY	1	
27	320 00 06	STEERING COLUMN ASSY WITH LOCK ARRANGEMENT	1	EXPORT MODEL
28	310 01 00 A	STEERING RACK ASSY	1	

L =LEFT HAND DRIVE
R=RIGHT HAND DRIVE

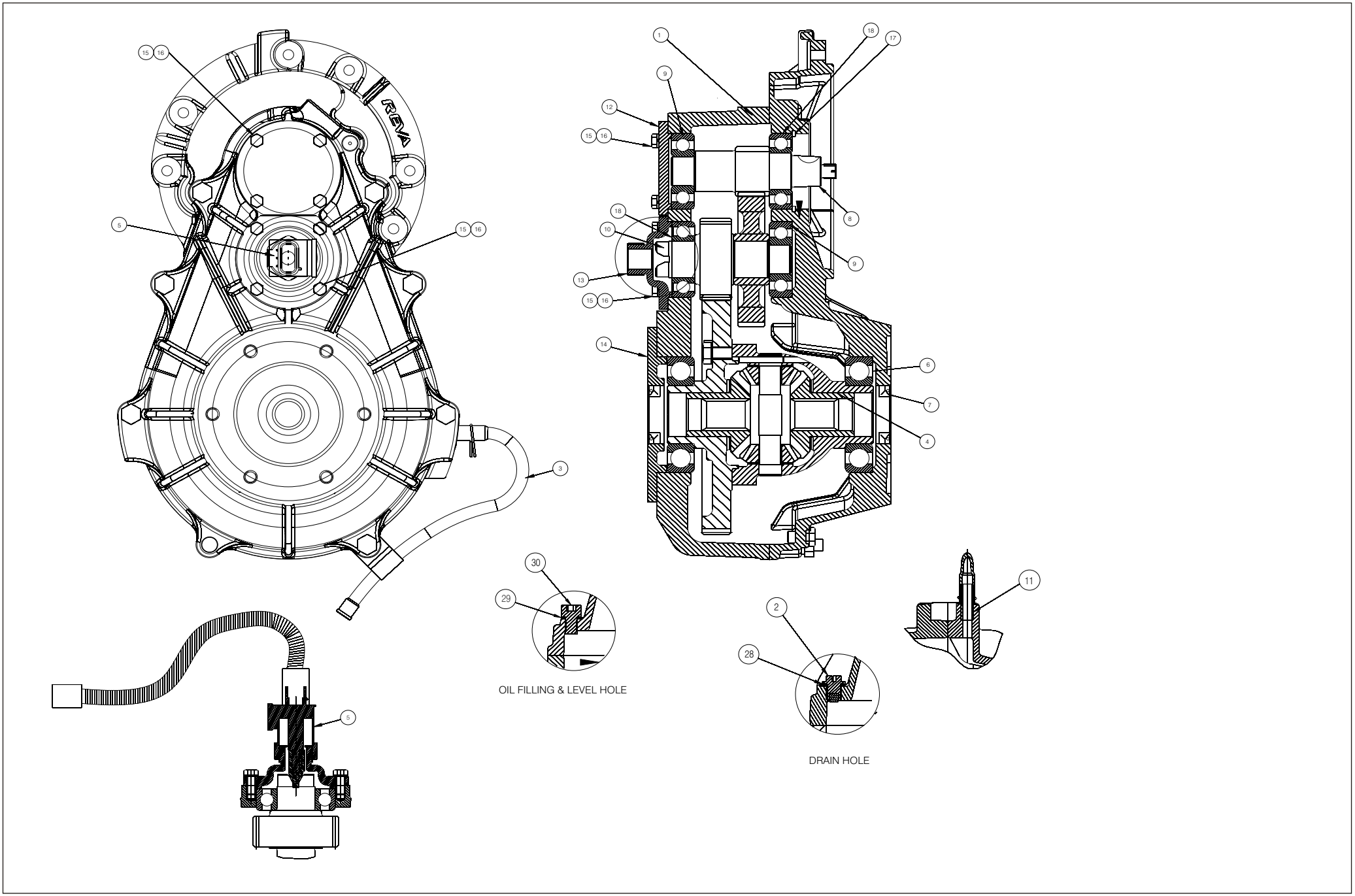
15
16
5
3
1
18
17
9
12
8
10
13
14
6
7
4
30
29
OIL FILLING & LEVEL HOLE
2
28
DRAIN HOLE
11

SL NO.	PART NO		DESCRIPTION	QTY.	REMARKS
1	412-00-78		TRANSMISSION CASING SET - ACD	1	
2	412-00-66		MAGNETIC DRAIN PLUG	1	EN 1A
3	412-00-04		BREATHER ASSY-TRANSMISSION	1	ASSY.
4	412-00-09		DIFFERENTIAL ASSY - ACD	1	ASSY.
5	412-00-87		SPEED SENSOR ASSY HALL EFFECT	1	ASSY.
6	412-01-46-60		BEARING-6208 (NORMAL CLEARENCE)	2	STD
7	412-01-47		SEAL-OIL-DIA 40 X 22 X 7	2	STD
8	412-01-76-DA		INPUT GEAR (19T) - ACD	1	EN 353
9	412-01-57		BEARING-6304 (NORMAL CLEARENCE)	2	STD
10	412-00-95		GEAR ASSY INTERMEDIATE 9.4:1	1	EN 353
11	412-01-24		UNION-BREATHER HOSE	1	En 8
12	412-01-81		END COVER INPUT	1	ALUMINIUM HE30
13	412-01-86		END COVER INTERMEDIATE	1	ALUMINIUM HE30
14	412-01-83		END COVER OUTPUT	1	ALUMINIUM HE30
15	010-01-15		BOLT HEX M5xO.8x15L	8	STD
16	022-01-05		WASHER LOCK M5	8	STD
17	092-01-05		CIRCLIP - INTERNAL 52x2 N	1	IS:3075
18	412-01-53-61		BEARING-6205 RS1 (NORMAL CLEARENCE)	2	STD
19	063-01-16		TRANSMISSION OIL-CASTROL-75 W 90 SYNTHETIC	500 ml	75 W 90
20	412-01-29-10		SHIM - INPUT SHAFT-DIA 52 (0.1mm THK)	1	BRASS
21	412-01-29-15		SHIM - INPUT SHAFT-DIA 52 (0.15mm THK)	1	BRASS
22	412-01-29-20		SHIM - INPUT SHAFT-DIA 52 (0.2mm THK)	1	BRASS
23	412-01-31-10		SHIM - OUTPUT SHAFT-DIA 80(0.1mm THK)	1	BRASS
24	412-01-31-15		SHIM - OUTPUT SHAFT-DIA 80(0.15mm THK)	1	BRASS
25	412-01-31-20		SHIM - OUTPUT SHAFT-DIA 80(0.2mm THK)	1	BRASS
26	063-01-09		METLOCK - Gr 492.	-	-
27	062-01-16		SEALANT, LOCTITE - 510	-	-
28	025-01-09		O-RING	1	NITRYLE RUBBER
29	025-01-08		SPL WASHER -ALUMINIUM	1	ALUMINIUM
30	018-01-03		CAP SCREW SOCKET HEAD -M8x1.25x12	1	STD

L =LEFT HAND DRIVE
R=RIGHT HAND DRIVE

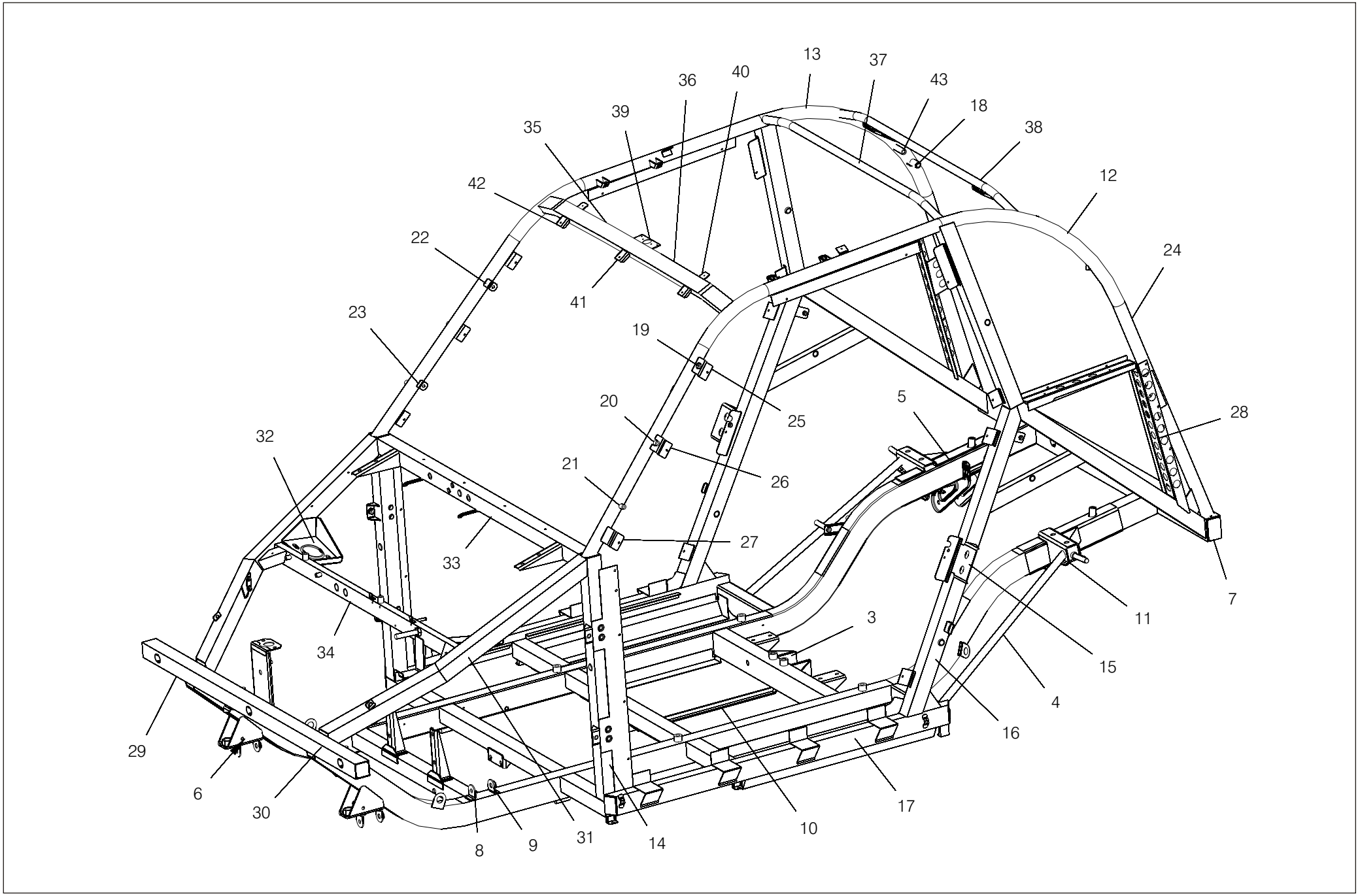
13
37
43
18
38
12
24
28
7
11
15
4
16
17
10
14
31
9
8
30
6
29
34
33
32
23
22
42
35
39
36
40
41
19
25
20
26
21
27
5
3

SL NO.	PART NO		DESCRIPTION	QTY.	REMARKS
1	500-00-25		CHASSIS-FRAME-ASSY-MAIN-CW	1	
2	511-01-24		FLOOR CROSS 4060	1	
3	511-01-28		BRACKET CENTER	2	
4	511-11-33		SHOCK GUSSET TUBE LEFT	2	
5	511-21-35		SHOCK MOUNT GUSSET TUBE RH	2	
6	512-00-02		A-ARM MOUNT WELDMENT	4	
7	512-00-30		REAR BUMPER WELDMENT	2	
8	512-01-06		A- ARM MT- PLATE FR	4	
9	512-01-07		A- ARM MT PLATE RR	4	
10	514-01-01		BATTERY CENTER SUPPORT	2	
11	515-10-00		SHOCK MNT WELDMENT REAR - LH	2	
12	520-10-02		CHASSIS-SIDE-ASSY-LH-CW	1	
13	520-20-02		CHASSIS-SIDE-ASSY-RH-CW	1	
14	521-10-00		HINGE-PILLAR-WELDMENT-ASSY-LH	1	
15	523-01-06		STRIKER PLATE	2	
16	523-10-00		LATCH-PILLAR-WELDMENT-LH	1	
17	524-10-00		ROCKER-BEAM-WELDMENT-LH	1	
18	525-01-03		SLAEEVE 7/16 S/BELT TOP ANCHORAGE	2	
19	525-01-20		INSERT-WS MOUNT-UPPER	1	
20	525-01-21		INSERT-WS MOUNT-MIDDLE	1	
21	525-01-22		INSERT-WS MOUNT-LOWER	1	
22	525-01-23		BRKT-A PILLAR MOUNT UPPER	2	
23	525-01-24		BRKT-A PILLAR MOUNT LOWER	2	
24	525-11-06		CANT RAIL-CW-LH	1	
25	527-01-29		FLANGE-APILLAR-DOOR UPPER	2	
26	527-01-30		FLANGE-A PILLAR-DOOR MIDDLE	2	
27	527-01-31		FLANGE-A PILLAR-DOOR LOWER	2	
28	527-11-21		REAR QUARTER FLANGE VERT-LH	1	
29	531-00-34		FRONT BUMPER WELDMENT	1	
30	531-11-01		STRUT BEAM FORWARD - LH	1	
31	531-11-02		STRUT BEAM REAR - LH	1	
32	532-20-00		STRUT MOUNT WELDMT - RH	1	
33	534-00-00		WINDSHIELD BEAM WELDMENT	1	
34	535-00-00		STRUT CROSS MEMBER WELDMENT	1	
35	541-00-10		ROOF BOW A WELDMENT-CW	1	
36	541-01-01		ROOFBOW-A	1	
37	541-01-02		ROOF BOW-B	1	
38	541-01-03		ROOF BOW-C	1	
39	541-01-06		MIRROR BRACKET	1	
40	541-01-10		BRKT-ROOF INNER	2	
41	541-01-11		BRKT-RTM MTG-ROOF-CENTER	1	
42	541-01-12		BRKT-RTM MTG - ROOF - SIDE	2	
43	542-01-03		HATCH DAMPER MOUNT	1	

L =LEFT HAND DRIVE
R=RIGHT HAND DRIVE

2

BODY & EXTERIOR

2.10 BODY PANELS
- 2.11 Front Fender Assembly-LH/RH
- 2.12 C antrail &Rear qtr panel Assembly-LH/RH
- 2.13 R oof &Hood Assembly
- 2.14 T ail light panel assembly

2.20 DOORS
- 2.21 D oor Assembly-LH/RH

2.30 BUMPER ASSY
- 2.31 Front & Rear Bumper Assembly

2.40 INTERIOR BODY
- 2.41 Fire wall,Floor panel,Battery box lower&upper Assembly

2.50 REAR TUB ASSY

2.60 WHEEL WELL & ROCKER PANEL ASSY

2.70 GLASS ASSY

2.80 COWL ASSY

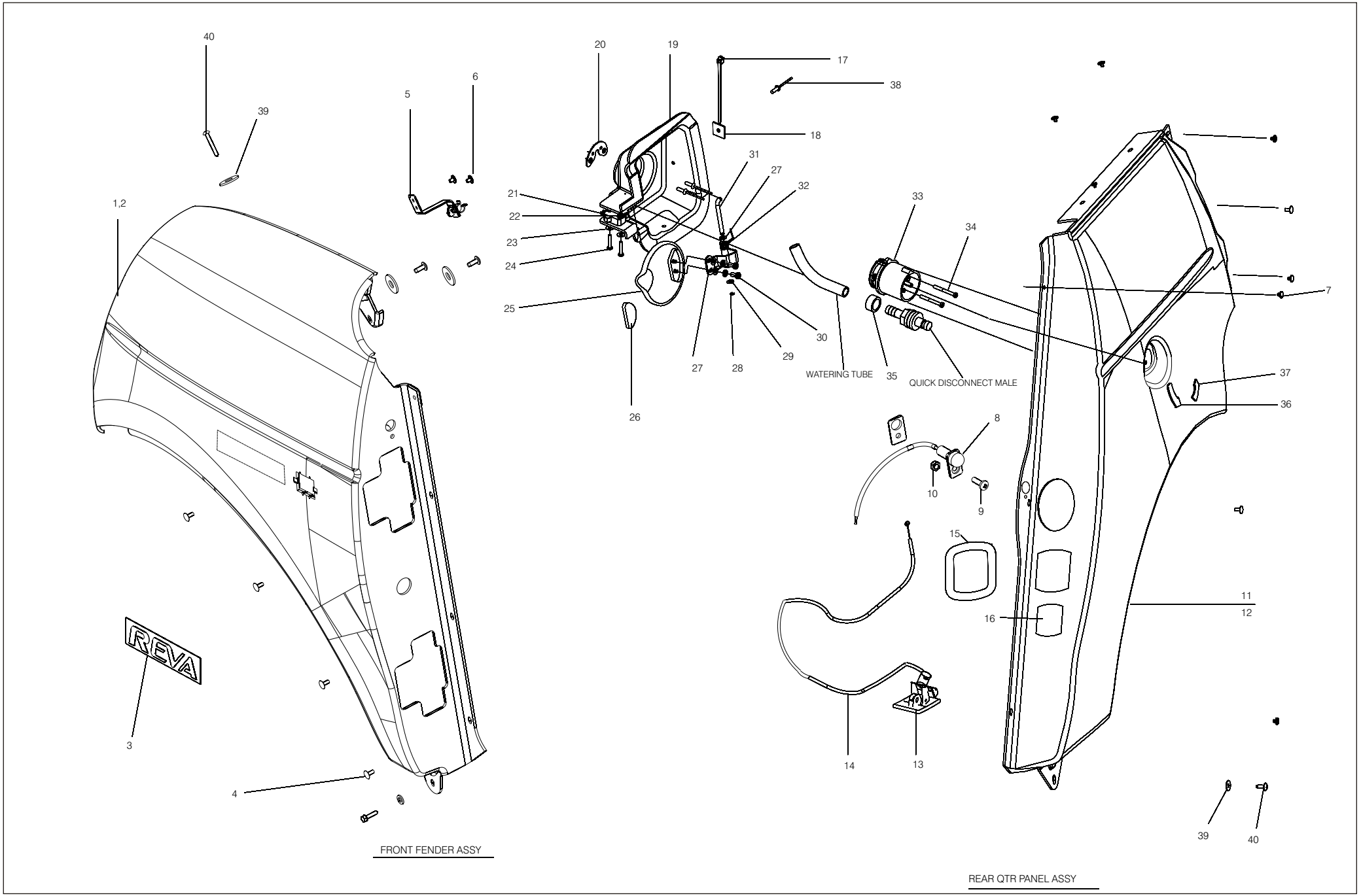
40
39
1,2
5
6
REVA
3
4
FRONT FENDER ASSY
20
19
17
38
18
31
27
32
21
22
23
24
25
26
27
28
29
30
WATERING TUBE
33
34
35
QUICK DISCONNECT MALE
7
37
36
8
10
9
15
16
11
12
14
13
39
40
REAR QTR PANEL ASSY

DESCRIPTION			REMARKS
KEY NO	PART NO	PART NAME	QTY	
1	651 11 01 A	FRONT FENDER - LH	1	
2	651 21 01 A	FRONT FENDER - RH	1	
3	650 01 02 A	DECAL, REVA-FrontFender/Tail Panel	2	
4	051 01 20	SCREW, SELFTAP, 4.2 X 19	6	
5	682 01 06 B	HOLDER - PROP ROD	1	
6	041 01 01	RIVET, POP, 4X8X15.5 L, NORMAL DOME HEAD	2	
7	043 01 01	RIVETS, DOUBLE FACED	16	
8	970 00 40 A	DOOR SWITCH ASSY	1	
9	006 01 20	SCREW, MACHINE, M6 x 1.0 x 20	1	
10	032 01 06 C	NUT, NYLOCK, M6 x1.0	1	
11	620 10 01	ASSY BONDED REAR QUARTER PANEL - LH	1	
12	620 20 01 A	ASSY BONDED REAR QUARTER PANEL - RH	1	
13	871 01 01	HATCH RELEASE LEVER	1	
14	871 01 02	CABLE HOOD/HATCH RELEASE	1	
15	621 01 32 A	HATCH RELEASE LEVER TRIM SEAL	1	
16	621 01 08	DECAL-TYRE DATA & RR HATCH REL-BLACK	1	
16	621 01 09	DECAL-TYRE DATA & RR HATCH REL-SILVER	1	
17	909 01 07	CABLE TIES, 150 mm	1	
18	909 01 13	CABLE TIE MOUNT, TC2 (S)	1	
19	621 01 33	SECONDARY BONDED PIECE CHARGE PORT	1	SUPPLIED WITH REAR QTR PANEL LH
20	621 01 35	NUT PLATE WELDMENT CHARGE PORT	1	
21	909 01 23	MICRO SWITCH	1	
22	032 01 03 C	NUT, NYLOCK, M3 x .5	2	
23	021 01 03 C	WASHER, FLAT, M3	4	
24	003 01 20	SCREW MACHINE M3X0.5X20	2	
25	621 00 02	ASSY BONDED CHARGE PORT LID	1	SUPPLIED WITH REAR QTR PANEL LH
26	621 01 03	TAPE, SINGLE SIDED, CHARGE PORT LID	1	
27	621 01 28 A	HINGE - CHARGE PORT LID	1	SUPPLIED WITH ASSY BONDED CHARGE PORT LID
28	091 01 03	CIRCLIP C-3.2	1	SUPPLIED WITH ASSY BONDED CHARGE PORT LID
29	021 01 05 A	WASHER, FLAT, M5	4	SUPPLIED WITH ASSY BONDED CHARGE PORT LID
30	051 01 09	SCREW 4.2x9	2	SUPPLIED WITH ASSY BONDED CHARGE PORT LID
31	621 01 30	HINGE PIN - CHARGE PORT	1	SUPPLIED WITH ASSY BONDED CHARGE PORT LID
32	621 01 29	SPRING CHARGE PORT LID	1	SUPPLIED WITH ASSY BONDED CHARGE PORT LID
33	909 01 19	BASE PLATE - CHARGE PORT	1	
34	004 01 35	SCREW MACHINE M4x35 PAN HEAD	2	
35	621 01 06	SPACER - QUICK DISCONNECT	1	
36	621 01 05	DECAL, WATER AFTER CHARGING	1	
37	621 01 04	DECAL, POWER 240 V AC, 15 AMPS	1	
38	041 01 01	RIVET, POP, 4X8X15.5 L, NORMAL DOME HEAD	12	
39	25 01 05	PLASTIC WASHER DIA 20X5X2THK	4	
40	051 01 15	SCREW, SELFTAP, 4.2 X 13	2	

L =LEFT HAND DRIVE
R=RIGHT HA ND DRIVE

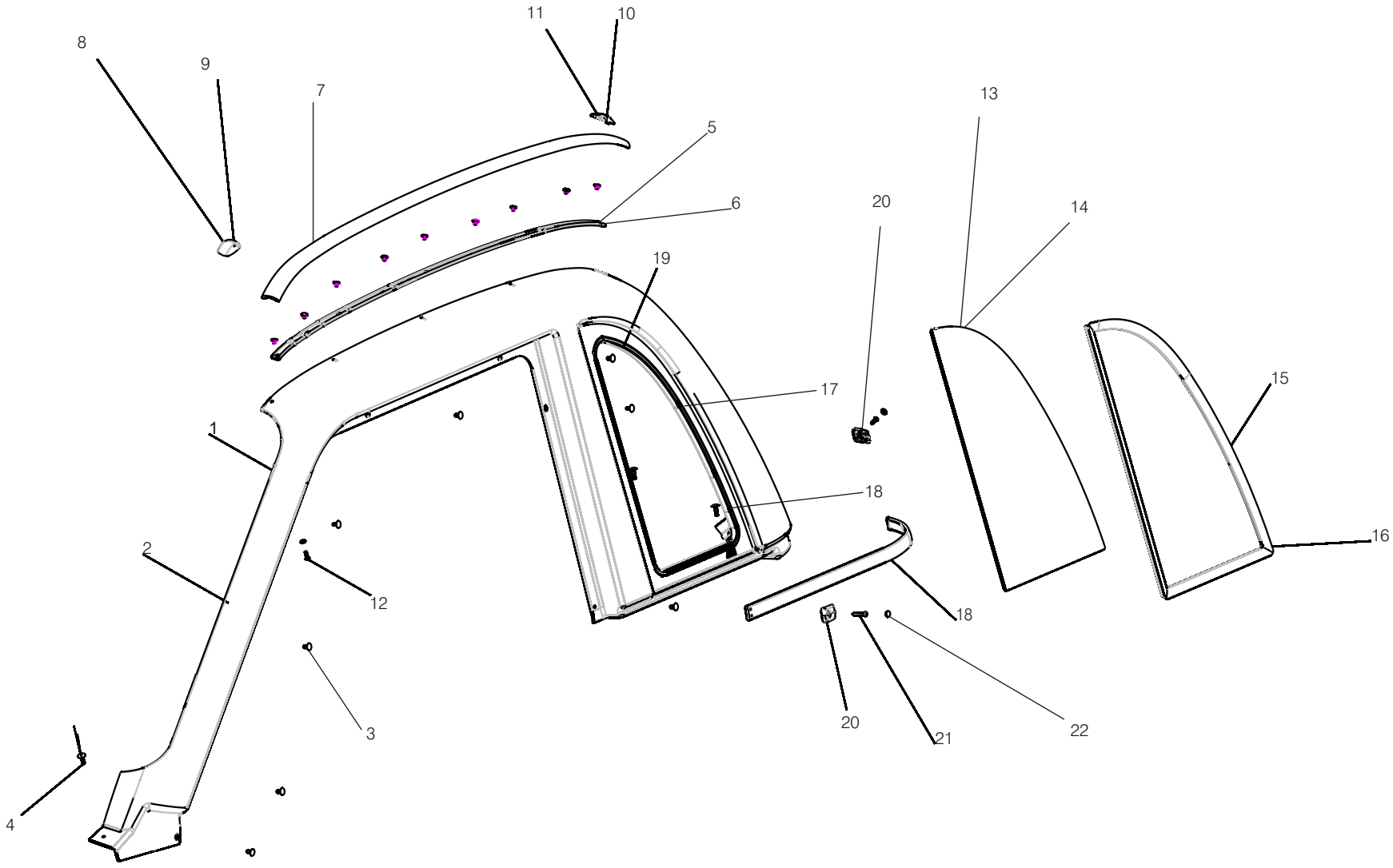
8
9
7
11
10
5
6
13
20
14
19
17
15
1
18
16
2
12
18
3
20
21
22
4

DESCRIPTION			REMARKS
KEY NO	PART NO	PART NAME	QTY	
1	631 11 01 A	CANTRAIL PANEL - LH	1	
2	631 21 01 A	CANTRAIL PANEL - RH	1	
3	043 01 01	RIVETS, DOUBLE FACED	16	
4	041 01 02	RIVET, POP, 4X12X15.5L,LARGE DOME HEAD	18	
5	610 11 05	CARRIER - SEAL CANTRAIL -LH	1	
6	610 21 05	CARRIER - SEAL CANTRAIL - RH	1	
7	610 01 01 C	SEAL CANTRAIL	2	
8	610 11 06 A	END CAP, FRONT-SEAL CANTRAIL-LH	1	
9	610 21 06 A	END CAP, FRONT-SEAL CANTRAIL-RH	1	
10	610 11 07 A	END CAP, REAR-SEAL CANTRAIL-LH	1	
11	610 21 07 A	END CAP, REAR-SEAL CANTRAIL-RH	1	
12	051 01 24	SCREW SELF TAP PAN HEAD, 3.0 X 25	2	
13	742 11 01 B	REAR QUARTER GLASS - LH	1	
14	742 21 01 B	REAR QUARTER GLASS - RH	1	
15	742 11 02 A	SEAL - H- REAR QUARTER GLASS - LH, 1350mm	1	
16	742 21 02 A	SEAL - H- REAR QUARTER GLASS - RH	1	
17	742 01 05 A	SEAL INNER - REAR QUARTER GLASS	2	
18	632 01 03 A	SEAL TRIM BC PILLAR (EXTRUDED) - EPDM	2	
19	087 01 07	TAPE DOUBLE SIDED		
20	632 01 04 B	END CAP - TRIM BC PILLAR	4	
21	054 01 01	SCREW, ECO-SYN M3.5, PAN HEAD	6	
22	632 01 06	COVER - END CAP - TRIM BC PILLAR	4	
23	061 01 38	URETHANE ADHESIVE - BETA SEAL U414 DOW	1	
24	061 01 03	SEALANT- SILICONE RTV-Black Colour	1	USED AS REQUIRED FOR QTR GLASS BONDING
25	061 01 05	SEALANT SILICONE RTV-CLEAR	1	USED AS REQUIRED FOR QTR GLASS BONDING

L =LEFT HAND DRIVE
R=RIGHT HAND DRIVE

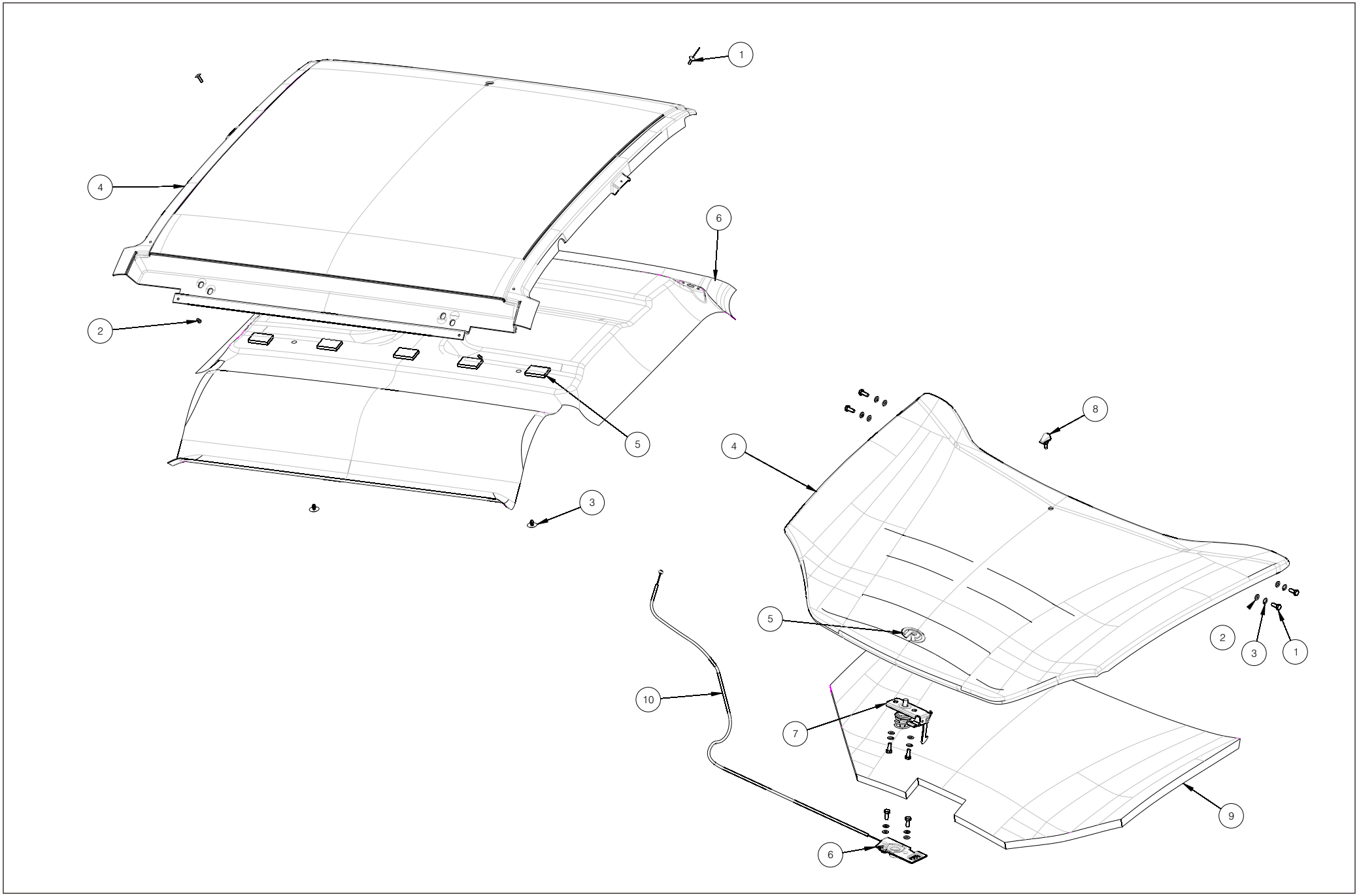
1
4
6
2
5
3
8
4
5
2
3
1
10
7
9
6

KEY NO	PART NO		DESCRIPTION	QTY.	REMARKS
1	041-01-02		RIVET, POP, 4X12X15.5L, LARGE DOME HEAD	2	
2	054-01-01		SCREW,ECO-SYN PAN HEAD,M3.5	2	
3	082-01-15		CLIP,MUSHROOM HEAD	2	
4	610-00-21		ROOF BONDED ASSY-CW	1	
5	087-01-11		TAPE SINGLE SIDED 5MM(T) X 25MM(W) X 128MM(L)	5	
6	868-01-26		HEAD LINER - CW	1	
1	013-01-16		BOLT, HEX, M6 X 1.0 X 16	8	
2	021-01-06		WASHER, FLAT, M6	8	
3	022-01-06		WASHER, LOCK, M6	8	
4	670-00-06		ASSY BONDED HOOD - CW	1	
5	670-01-01		REVA MONOGRAM	1	
6	672-00-10		HOOD LATCH ASSY BOTTOM	1	
7	672-00-20		HOOD LATCH ASSY, TOP	1	
8	690-00-45		NOZZLE ASSY - WINDSHIELD WASHER-CW	1	
9	698-01-21		SOUND DEADNER PAD-HOOD A/C - CW	1	
10	871-01-02		CABLE HOOD / HATCH RELEASE	1	

L =LEFT HAND DRIVE
R=RIGHT HAND DRIVE

2.14 TAIL LIGHT PANEL ASSY

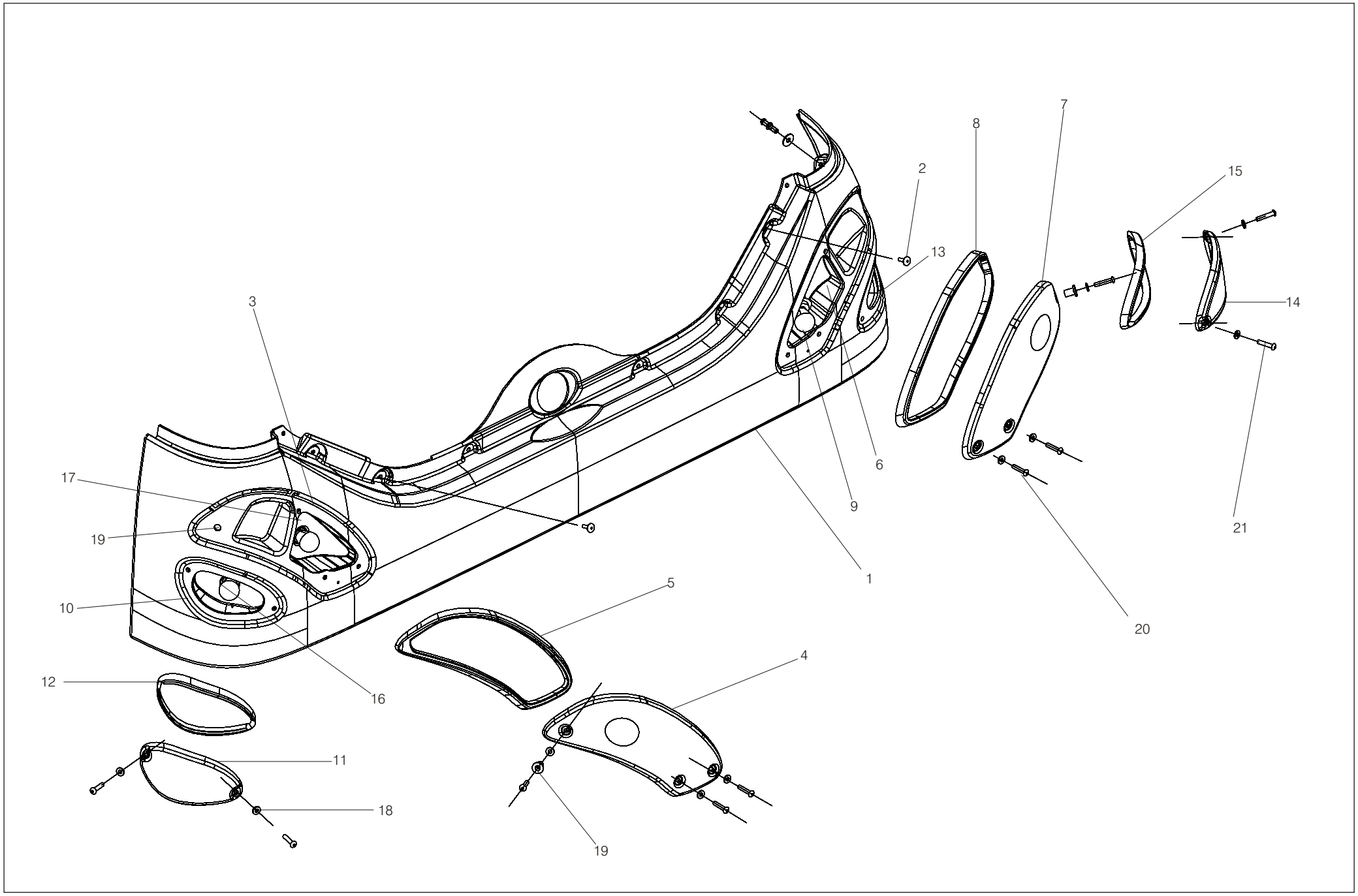

DESCRIPTION			REMARKS
KEY NO	PART NO	PART NAME	QTY	
1	641 00 00 B	ASSY BONDED TAIL LIGHT PANEL	1	
2	045 01 01	TWO PIECE RIVET	8	
3	965 10 00	LIGHT ASSY, REAR COMBINATION-LH	1	SUPPLIED IN SET, INDIVIDUAL PARTS NOT AVAILABLE SEPARATELY
4	641 11 10 A	TAIL LIGHT LENS - BRAKE & ILLU - LH	1	
5	641 11 17 A	TAIL LIGHT GASKET UPPER -LH	1	
6	965 20 00	LIGHT ASSY, REAR COMBINATION-RH	1	SUPPLIED IN SET, INDIVIDUAL PARTS NOT AVAILABLE SEPARATELY
7	641 21 10	TAIL LIGHT LENS - BRAKE & ILLU - RH	1	
8	641 21 17	TAIL LIGHT GASKET UPPER - RH	1	
9	962 01 01	BULB, FRONT / REAR COMBINATION, 12V, 21/5 W	2	
10	966 10 00	LIGHT ASSY, REAR TURN-LH	1	SUPPLIED IN SET, INDIVIDUAL PARTS NOT AVAILABLE SEPARATELY
11	641 11 20 A	TAIL LIGHT LENS - TURN SIGNAL - LH	1	
12	641 11 18 A	TAIL LIGHT GASKET LOWER - LH	1	
13	966 20 00	LIGHT ASSY, REAR TURN-RH	1	SUPPLIED IN SET, INDIVIDUAL PARTS NOT AVAILABLE SEPARATELY
14	641 21 20	TAIL LIGHT LENS - TURN SIGNAL - RH	1	
15	641 21 18	TAIL LIGHT GASKET LOWER - RH	1	
16	965 01 03	BULB TURN SIGNAL 12V, 21W	2	
17	001 01 25 A	SCREW, MACHINE, M5 X 0.8 X 25	10	
18	025 01 01	WASHER-SEAL BRAKE LIGHT LENS	10	
19	007 01 25	WELL NUT M5x0.8	10	
20	055 01 05	SCREW ALLEN - M5 X 0.8 X 25 - ENMOLDED , ACRILIC RED	4	
21	055 01 15	SCREW ALLEN - M5 X 0.8 X 25 - ENMOLDED, ACRILIC, AMBER	4	

L =LEFT HAND DRIVE
R=RIGHT HAND DRIVE

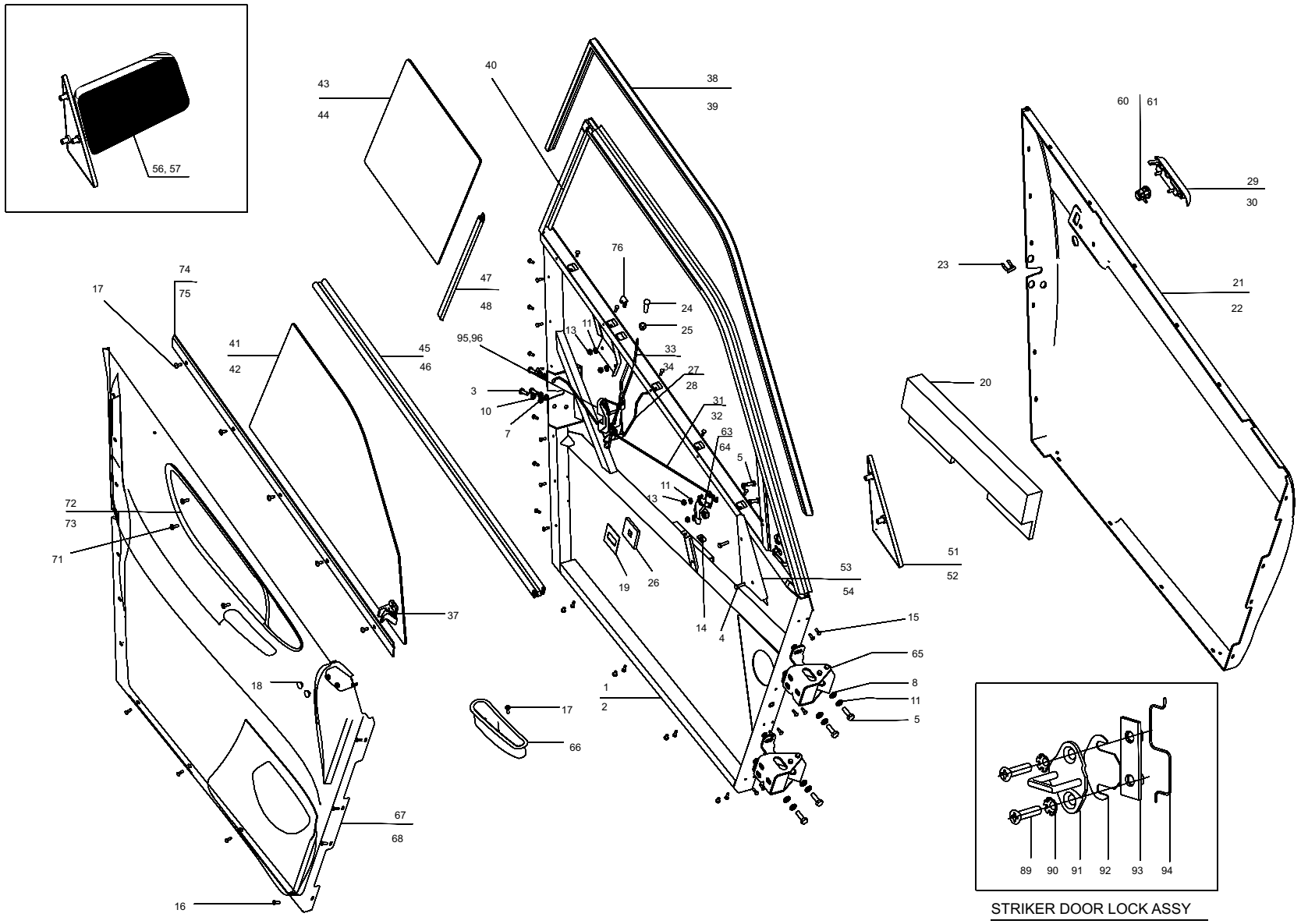

STRIKER DOOR LOCK ASSY

DESCRIPTION			REMARKS
KEY NO	PART NO	PART NAME	QTY
1	721 10 00 C	DOOR FRAME ASSY - LH	1
2	721 20 00 C	DOOR FRAME ASSY - RH	1
3	005 01 20	SCREW MACHINE M5 X .8 X 20 PAN HEAD	6
4	006 01 20	SCREW, MACHINE, M6 x 1.0 x 20	6
5	014 01 16	BOLT, HEX, M6 x 1.25 x 16	4
6	014 01 25	BOLT, HEX, M8 x 1.25 x 25	16
7	021 01 05 A	WASHER, FLAT, M5	2
8	021 01 06 A	WASHER, FLAT, M6	8
9	021 01 08 A	WASHER, FLAT, M8	16
10	022 01 05 A	WASHER, LOCK M5	2
11	022 01 06 A	WASHER, LOCK M6	6
12	022 01 08 A	WASHER, LOCK M8	16
13	032 01 06 C	NUT, NYLOCK, M6 x1.0	8
14	033 01 06	NUT, U-TYPE	2
15	041 01 02	RIVET, POP,4X12X15.5L,LARGE DOME HEAD	46
16	041 01 05	RIVET POP, 4X12X15.5L, POWDER COATED,	12
17	051 01 15	SCREW, SELFTAP, 4.2 X 13	14
18	082 01 17	PLUG - PLASTIC	2
19	087 01 19	TAPE - FILM BASED - DOUBLE SIDED, SELF ADHESIVE	2
20	720 01 05 A	FOAM INSERT - INSTRUSION BEAM	2
21	722 11 01	DOOR PANEL - LH	1
22	722 21 01 C	DOOR PANEL - RH	1
23	723 01 02	CLIP, CYLINDER SET - DOOR LOCK	2
24	723 01 06	KNOB - DOOR LOCK - INSIDE	2
25	723 01 07	CAP - DOOR INSIDE KNOB	2
26	723 01 14 A	PAD - INSIDE DOOR HANDLE	2
27	723 11 03	LINKAGE ,DOOR LOCK CYLINDER- LH	1
28	723 21 03	LINKAGE ,DOOR LOCK CYLINDER- RH	1
29	723 11 04 A	HANDLE - DOOR OUTER - LH	1
30	723 21 04 A	HANDLE - DOOR OUTER - RH	1
31	723 11 08	LINKAGE ,DOOR HANDLE INSIDE- LH	1
32	723 21 08	LINKAGE ,DOOR HANDLE INSIDE- RH	1
33	723 11 09	LINKAGE ,DOOR LOCK KNOB- LH	1
34	723 21 09	LINKAGE ,DOOR LOCK KNOB- RH	1
35	723 11 20 A	LATCH - DOOR - LH	1
36	723 21 20 A	LATCH - DOOR - RH	1
37	724 01 02 A	LATCH - DOOR GLASS	2
38	724 11 05 A	SEAL-DOOR FRAME OUTER- LH	1
39	724 21 05 A	SEAL-DOOR FRAME OUTER -RH	1
40	724 01 07 A	SEAL-UPPER-WINDOW-FRAME	2

L =LEFT HAND DRIVE
R=RIGHT HAND DRIVE

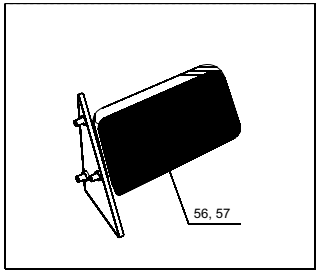

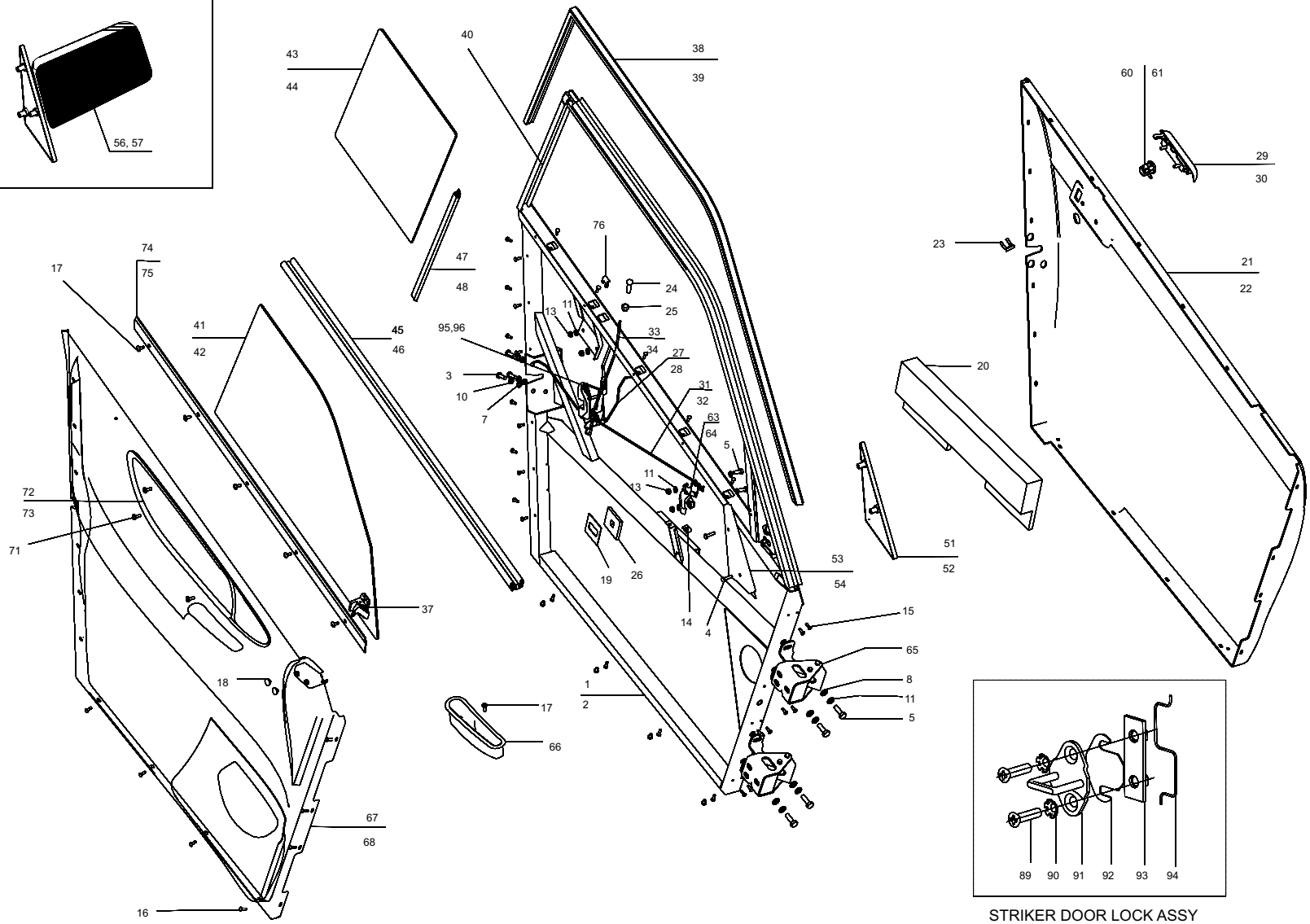

STRIKER DOOR LOCK ASSY

DESCRIPTION			REMARKS
KEY NO	PART NO	PART NAME	QTY	
41	724 11 01	GLASS DOOR FRONT-LH	1	
42	724 21 01	GLASS DOOR FRONT-RH	1	
43	724 11 03	GLASS DOOR REAR - LH	1	
44	724 21 03	GLASS DOOR REAR-RH	1	
45	724 11 04 A	SEAL - LOWER - WINDOW FRAME - LH	1	
46	724 21 04 A	SEAL - LOWER - WINDOW FRAME-RH	1	
47	724 11 05	SCRAPE DOOR GLASS LH	1	
48	724 21 05 A	SCRAPE DOOR GLASS RH	1	
49	724 11 20 A	SEAL BULB DOOR RING-LH	1	
50	724 21 20 A	SEAL BULB-DOOR RING-RH	1	
51	726 11 01 B	PATCH - MIRROR - OUTSIDE - LH	1	
52	726 21 01 C	PATCH - MIRROR - OUTSIDE - RH	1	
53	726 11 02 A	PATCH - MIRROR - INSIDE - LH	1	
54	726 21 02 B	PATCH - MIRROR - INSIDE - RH	1	
55	851 01 40	INSULATOR DOOR INNER FRONT	2	
56	726 11 03	MIRROR - OUTSIDE -LH	1	
57	726 21 03	MIRROR - OUTSIDE -RH	1	
56	726 11 08	REAR VIEW MIRROR - EXTERNAL - LH - PAINTED	1	
57	726 21 08	REAR VIEW MIRROR - EXTERNAL - RH - PAINTED	1	
58	851 11 41	INSULATOR DOOR INNER REAR - LH	1	
59	851 21 41	INSULATOR DOOR INNER REAR - RH	1	
60	723 10 01 A	CYLINDER SET - DOOR LOCK - LH	1	
61	723 20 01 A	CYLINDER SET - DOOR LOCK - RH	1	
62	723 01 16	RUBBER STOPPER - DOOR INSIDE HANDLE	2	
63	723 11 05 A	HANDLE - DOOR INSIDE - LH	1	
64	723 21 05 A	HANDLE - DOOR INSIDE -RH	1	
65	727 00 00 C	DOOR HINGE ASSY	4	
66	851 01 02 A	PULL POCKET DOOR	2	
67	851 11 03	INTERIOR DOOR PANEL - LH	1	
68	851 21 03	INTERIOR DOOR PANEL - RH	1	
69	851 11 09	INTERIOR DOOR PANEL - LH - SOFT TOUCH	1	
70	851 21 09	INTERIOR DOOR PANEL - RH - SOFT TOUCH	1	
71	082 01 18	PLASTIC FASTENER - MUSHROOM HEAD	6	
72	851 11 16	SIDE TRIM - DOOR INNER - LH	1	
73	851 21 16	SIDE TRIM - DOOR PANEL - RH	1	
74	721 11 8 B	DOOR WINDOW FRAME CLOSEOUT- LH	1	
75	721 21 8 B	DOOR WINDOW FRAME CLOSEOUT- RH	1	
76	721 01 10	STOPPER DOOR GLASS REAR	2	
77	061 01 03	SEALANT- SILICONE RTV-Black Colour	1	USED AS REQUIRED
78	061 01 04	ADHESIVE- RUBBER	1	USED AS REQUIRED

L =LEFT HAND DRIVE
R=RIGHT HAND DRIVE

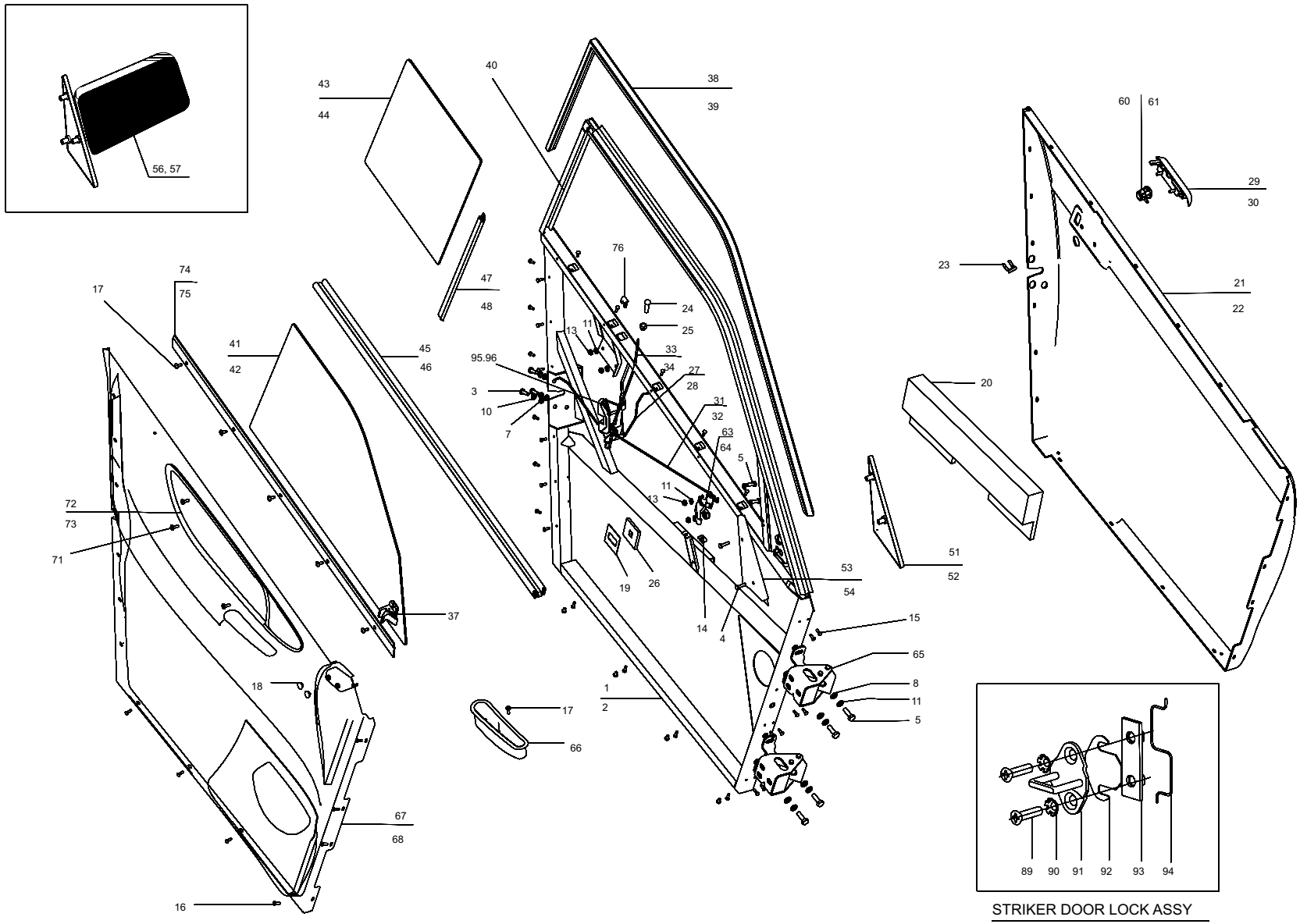

STRIKER DOOR LOCK ASSY

DESCRIPTION				REMARKS
KEY NO	PART NO	PART NAME	QTY	
79	062 01 04	BASE MATL - LACOM STICKER	12	
80	062 01 08	LACOM STICKER, DIA 19 mm - RED	12	
81	062 01 09	LACOM STICKER, DIA 19 mm - BLUE	12	
82	062 01 11	LACOM STICKER, DIA 19 mm - YELLOW	12	
83	062 01 12	LACOM STICKER, DIA 19 mm - WHITE	12	
84	062 01 13	LACOM STICKER, DIA 19 mm - GREEN	12	
85	062 01 14	LACOM STICKER, DIA 19 mm - COPPER DUST	12	
86	722 01 02	PAD SOUND DEADENER DOOR PANEL - LOWER	1	
87	722 01 03	PAD SOUND DEADENER DOOR PANEL - MIDDLE	1	
88	722 01 04	PAD SOUND DEADENER DOOR PANEL - UPPER	1	
89	018 01 91	SCREW,CSK, PHILIPS HEAD M8x1.25x25	4	
90	022 01 97	WASHER, SERATED CONICAL, M8	2	
91	723 01 10	STRIKER - DOOR LOCK	1	
92	723 01 11	SPACER - DOOR LOCK STRIKER	3	
93	723 01 12	NUT PLATE STRIKER - DOOR LOCK	2	
94	723 01 15	SPRING - NUTPLATE STRIKER	2	
95	723 10 25	LATCH ASSY - DOOR - LH	1	
96	723 20 25	LATCH ASSY - DOOR - RH	1	

L =LEFT HAND DRIVE
R=RIGHT HAND DRIVE

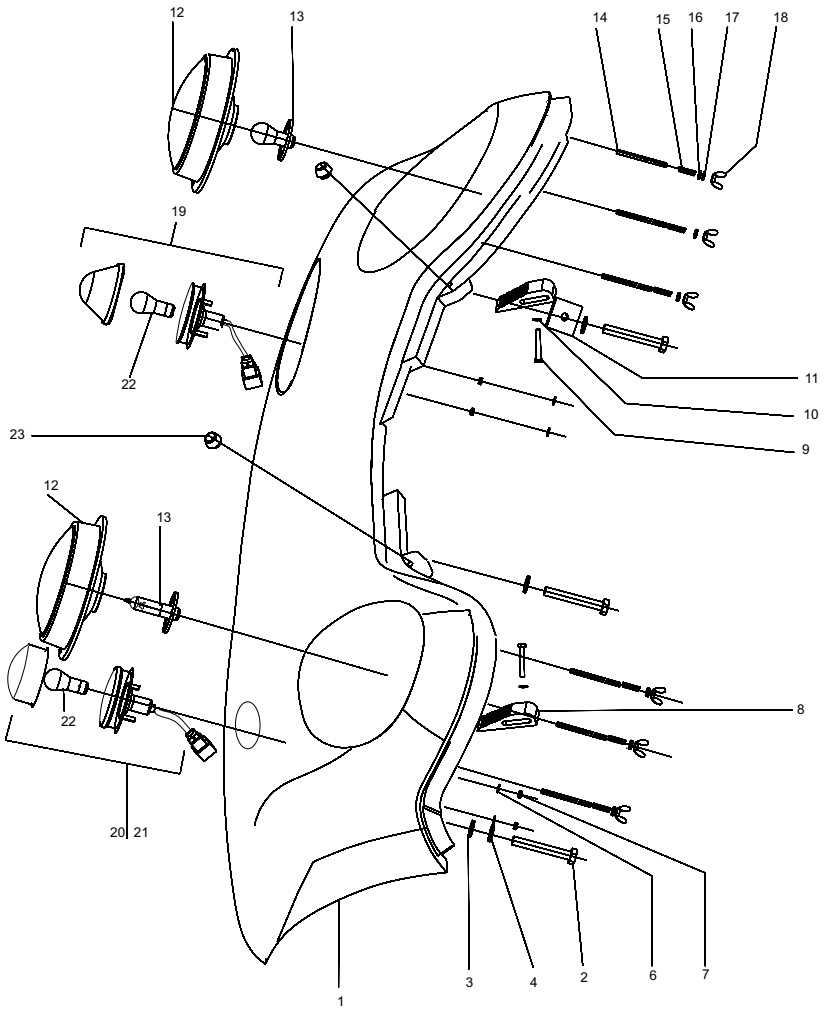

FRONT BUMPER ASSY

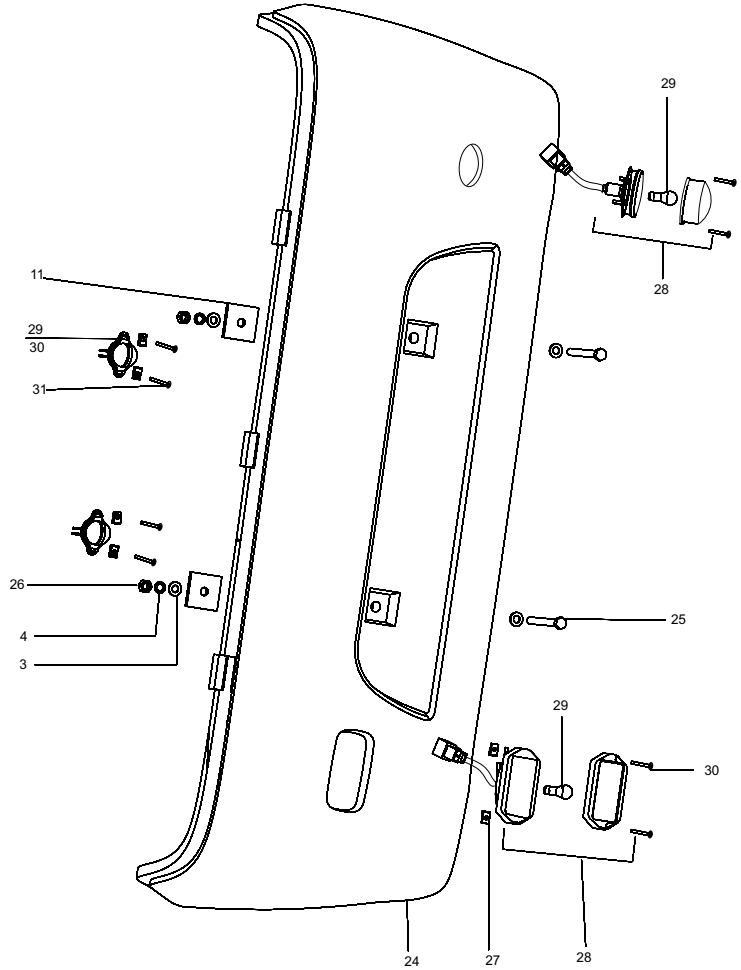

REAR BUMPER ASSY

DESCRIPTION			REMARKS
KEY NO	PART NO	PART NAME	QTY	
1	711 01 01	FRONT BUMPER PANEL (ROTO MOULDED)	1	REGULAR
1	711 00 12	ASS Y. BONDED FRONT BUMPER PANEL - PRE COL OURED	1	
1	711 00 15	BONDED ASSY - FRONT BUMPER (VAC. FORMED MAT CLEAR)	1	
1	711 00 10	BONDED ASSY - FRONT BUMPER (PAINTED)	1	
2	015 01 70	BOLT,HEX, M10X1.5X70	3	
3	021 01 10 A	WASHER, FLAT, M10	7	
4	022 01 10 A	WASHER, LOCK M10	5	
5	004 01 45	SCREW, MACHINE, M4 x 0.7 x 45	4	
6	021 01 04 A	WASHER FLAT M4	4	
7	032 01 04 C	NUT, NYLOCK, M4 x .7	4	
8	711 01 05 A	WEDGE - FRONT BUMPER ADJUSTMENT	2	
9	013 01 35	BOLT,HEX, M6X1X35	2	
10	024 01 02	D' WASHER M6	2	
11	085 01 05	SHIM, 5MM STOCK	5	
12	961 00 00	HEAD LIGHT ASSY	2	
12	961 00 05	HEAD LIGHT ASSY WITH PARKING LIGHT	2	
13	961 01 01	BULB, HEADLAMP ,45/40 W	2	
13	961 01 15	BULB, HEADLAMP ,55/60 W	2	
14	012 01 61	STUD M5	3	
15	961 01 03	SPRING, HEAD LIGHT ASSY	6	
16	021 01 05 A	WASHER, FLAT, M5	6	
17	023 01 07	WASHER, CUP M5, HEADLIGHT ASSY	6	
18	030 01 05	WING NUT STAMPING M5	6	
19	962 00 00	LAMP ASSY- FRONT COMBINATION	2	
20	962 10 03	LAMP ASSY - DIRECTION INDICATOR - FRONT - LH	1	
21	962 20 03	LAMP ASSY - DIRECTION INDICATOR - FRONT - RH	1	
22	962 01 01	BULB, FRONT / REAR COMBINATION, 12V, 21/5 W	2	FOR A/C & CLASSE MODEL SINGLE FILAMENT BULB IS USED
23	680 01 02 A	HOOD STOP RUBBER	2	
24	712 01 01	REAR BUMPER PANEL - ROTOMOLDED	1	
24	712 00 12	ASSY. BONDED REAR BUMP ER PANEL - P RE COL OURE D	1	
24	712 00 15	BONDED ASSY - REAR BUMPER (VAC FORMED & TEXTURED)	1	
24	712 00 10	BONDED ASSY - REAR BUMPER (PAINTED)	1	
25	015 01 90 B	BOLT, HEX, M10 x 1.5 x 90	2	
26	031 01 10 A	NUT, HEX, M10 x1.50	2	
27	033 01 07	NUT, U-TYPE	12	
28	967 00 00	LIGHT ASSEMBLY, BACKUP	2	
28	967 00 0201	LIGHT ASSY. BACK UP "E" MARKED	2	
29	967 01 01	BULB, BACKUP LIGHT, 12V,5W	2	
30	051 01 25	SCREW SELFTAP 4.2 X 25	4	
31	964 00 00	LIGHT ASSEMBLY, LICENSE PLATE	2	
32	964 01 01	BULB, LICENSE LIGHT, 12V, 5 W	2	
33	051 01 20	SCREW, SELFTAP, 4.2 X 19	4	
34	969 00 01 01	LIGHT ASSY. REAR FOG LAMP	1	
35	712 01 07	LOWER SKIRT - REAR BUMPER	1	

L =LEFT HAND DRIVE
R=RIGHT HA ND DRIVE

2.41 FIREWALL, FLOOR PANEL, BATTERY BOX LOWER & UPPER ASSY

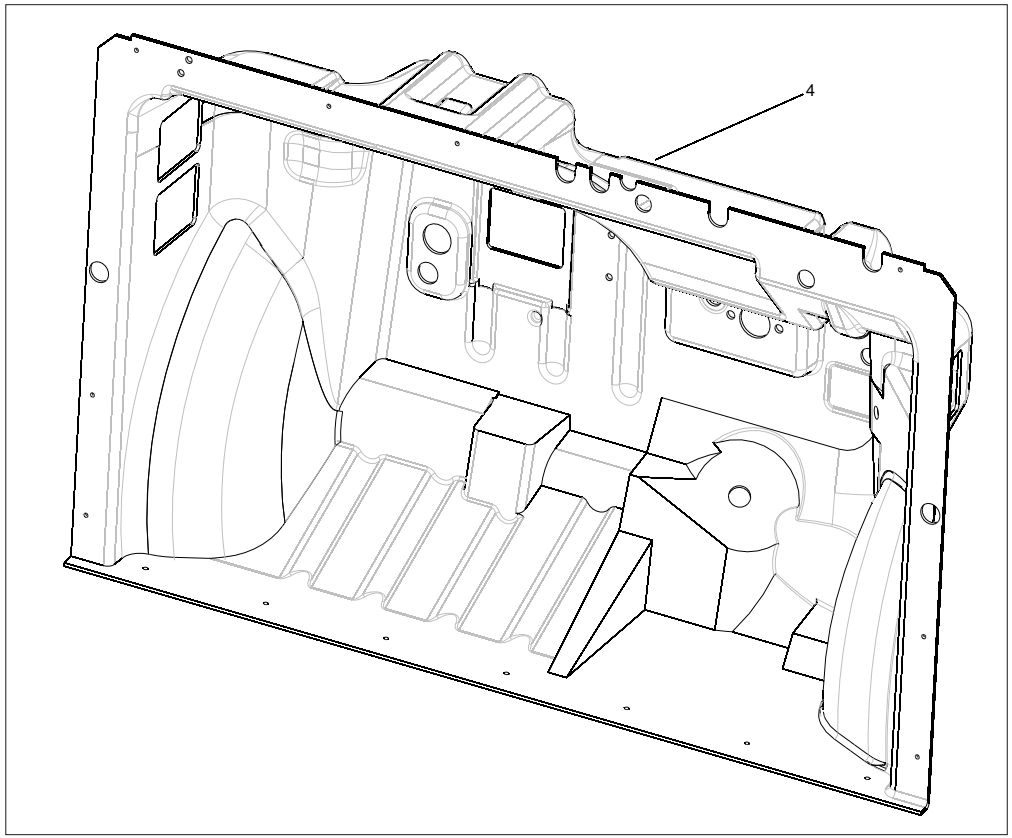

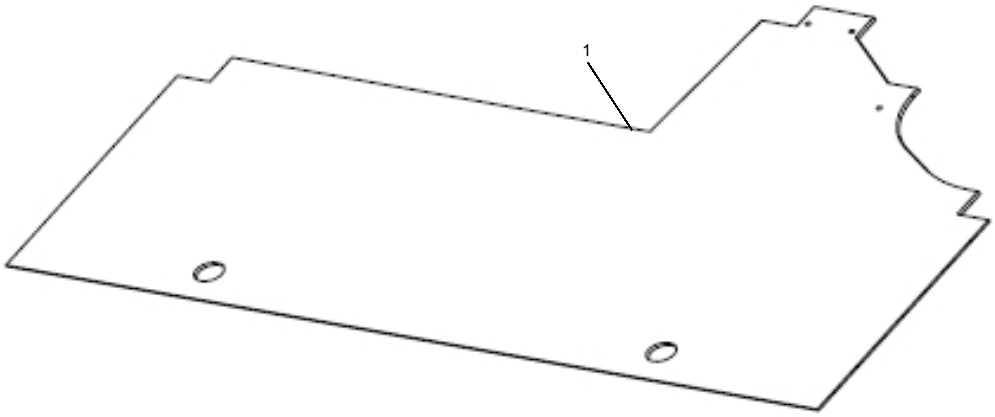

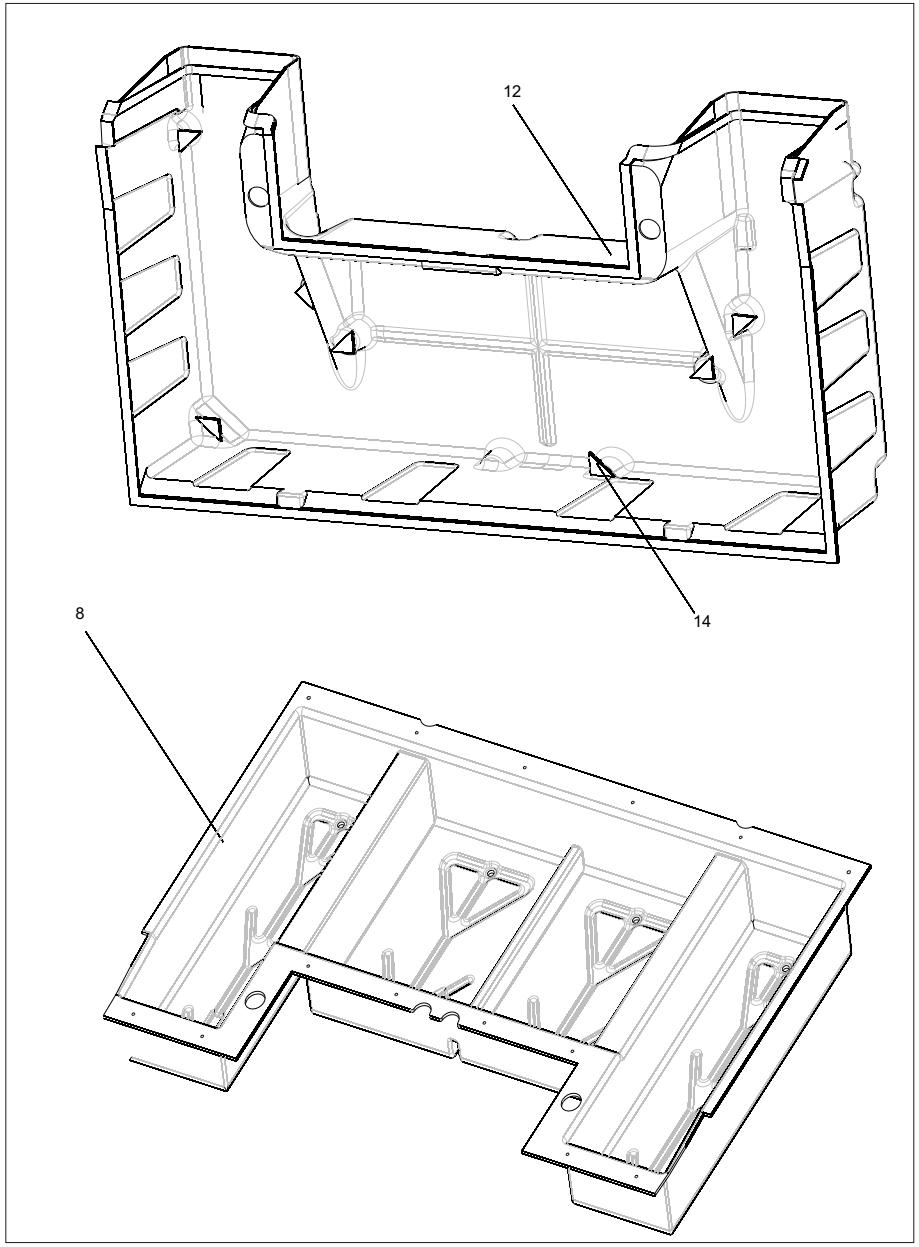

DESCRIPTION			REMARKS
KEY NO	PART NO	PART NAME	QTY
1	811 01 01 E	FRONT FLOOR PANEL	1
2	053 01 32 A	HEX HEAD SELF DRILLING SCREW 4.2 X 32	24
3	061 01 03	SEALANT- SILICONE RTV-Black Colour	
4	815 01 01 C	FIREWALL	1
4	815 01 15	FIREWALL -A/C	1
5	051 01 15	SCREW, SELFTAP, 4.2 X 13	2
6	053 01 20 A	HEX HEAD SELF DRILLING SCREW 4.2 X 19	10
7	815 00 02	OUTLET VENTILATOR ASSY	1
8	851 01 04 B	BATTERY BOX LOWER	1
9	851 01 06	BRKT HOLD DOWNS BOX TOP	2
10	041 01 01	RIVET, POP, 4X8X15.5 L, NORMAL DOME HEAD	8
11	851 01 12	DRAIN VALUE	1
12	851 01 05 D	BATTERY BOX - TOP	1
13	087 01 18	TAPE, SINGLE SIDED 15 X 3 X 5.30	1
14	851 01 15	FOAM HOLD DOWNS	10
15	007 01 25	WELLNUT M5X0.8	2
16	005 01 20	SCREW MACHINE M5 X .8 X 20	2

L =LEFT HAND DRIVE
R=RIGHT HAND DRIVE

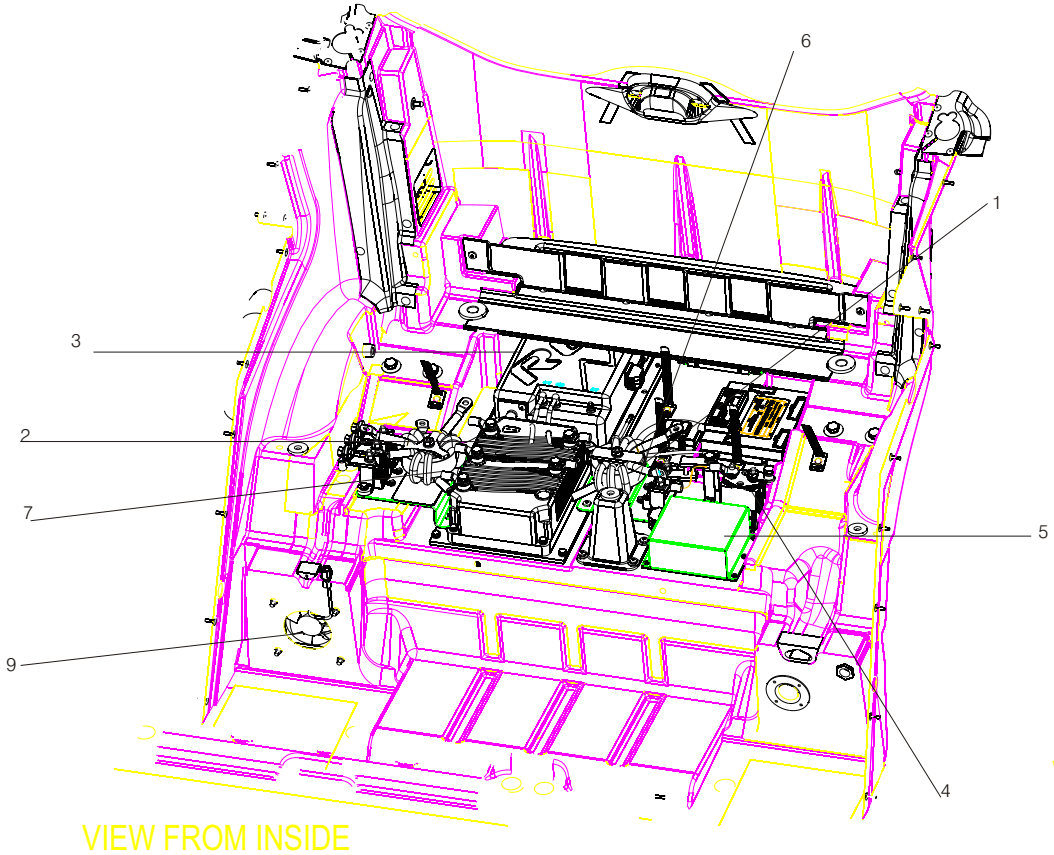
6
1
3
2
7
5
9
4
VIEW FROM INSIDE

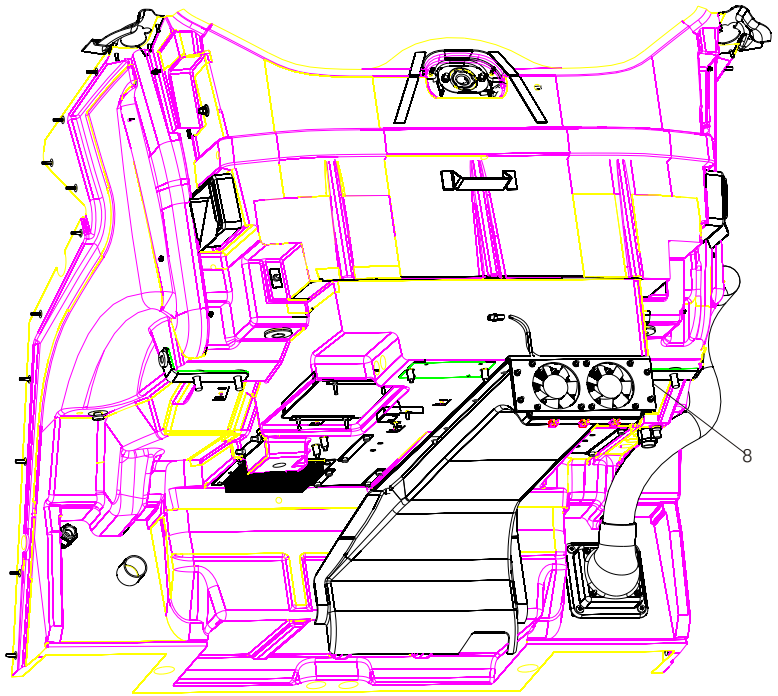
8
VIEW FROM BOTTOM

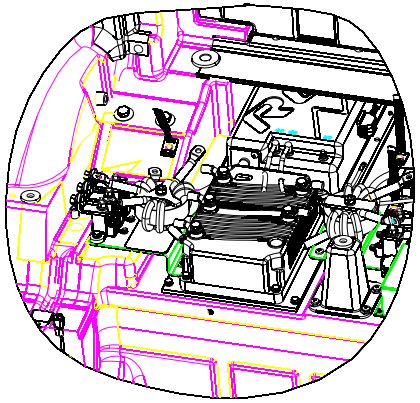

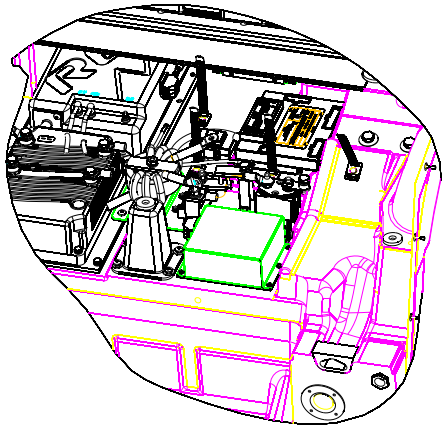

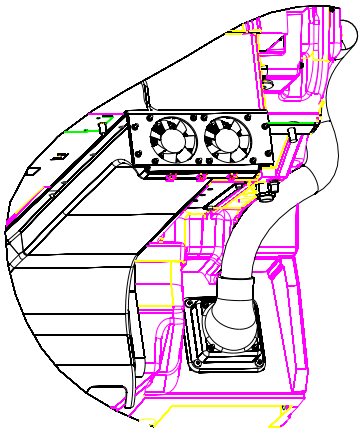

DESCRIPTION				REMARKS
KEY NO	PART NO	PART NAME	QTY	
1	933 00 0051	EMS ASSY EURO	1	
2	942 00 16	AC MOTOR CONTROLLER ASSY COMPLETE	1	
3	934 00 06	ASSY CHARGER-400W COMPLETE ACD	1	
4	943 01 05	MAIN CONTACTOR	1	
5	862 00 41	ASSY DC DC CONVERTER CCS	1	
6	938 00 60	EMI CORE ASSY BATTERY/INPUTS	1	
7	938 00 65	EMI CORE ASSY -MOTOR /OUTPUT SIDE	1	
8	913 00 04	FAN ASSY AC CONTROLLER & CHARGER COOLING	1	
9	913 01 01	FAN BATTERY VENTILATION	1	

L =LEFT HAND DRIVE
R=RIGHT HAND DRIVE

2.60 WHEELWELL AND ROCKER PANEL ASSY LH/RH

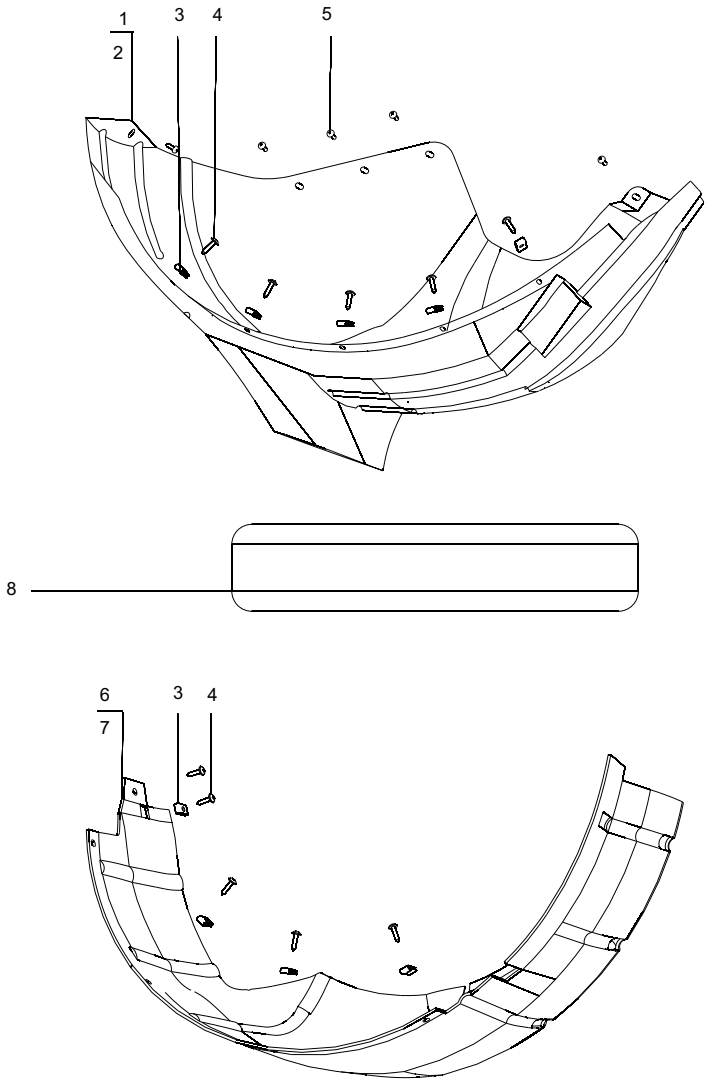

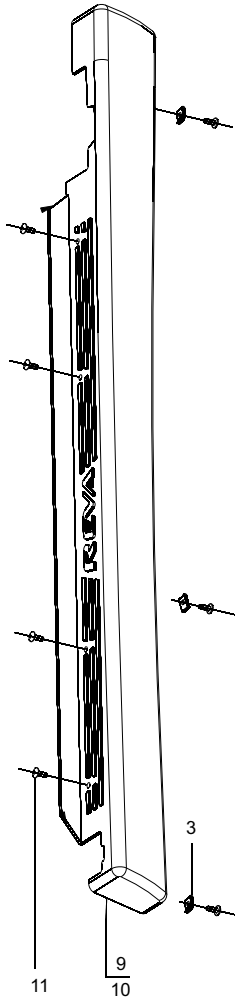

DESCRIPTION			REMARKS
KEY NO	PART NO	PART NAME	QTY	
1	731 11 00	WHEEL WELL FRONT - LH	1	
2	731 21 00	WHEEL WELL FRONT - RH	1	
3	033 01 06	NUT, U-TYPE	24	
4	051 01 20	SCREW, SELFTAP, 4.2 X 19	24	
5	053 01 20 A	HEX HEAD SELF DRILLING SCREW 4.2 X 20 MM LENGTH	8	
6	732 11 00	WHEEL WELL REAR - LH	1	
7	732 21 00	WHEEL WELL REAR - RH	1	
8	732 01 01	PAD SOUND DEADENER WHEEL WELL REAR UPPER	2	
9	660 11 00 A	ROCKER PANEL - LH (ROTOMOLDED)	1	
9	660 11 06	ROCKER PANEL - LH (VAC. FORMED, PAINTED)	1	EXPORT MODEL
10	660 21 00 A	ROCKER PANEL - RH	1	
10	660 21 06	ROCKER PANEL - RH (VAC FORMED, PAINTED)	1	EXPORT MODEL
11	051 01 15	SCREW, SELFTAP, 4.2 X 13	14	

L =LEFT HAND DRIVE
R=RIGHT HAND DRIVE

2.70 GLASS ASSY

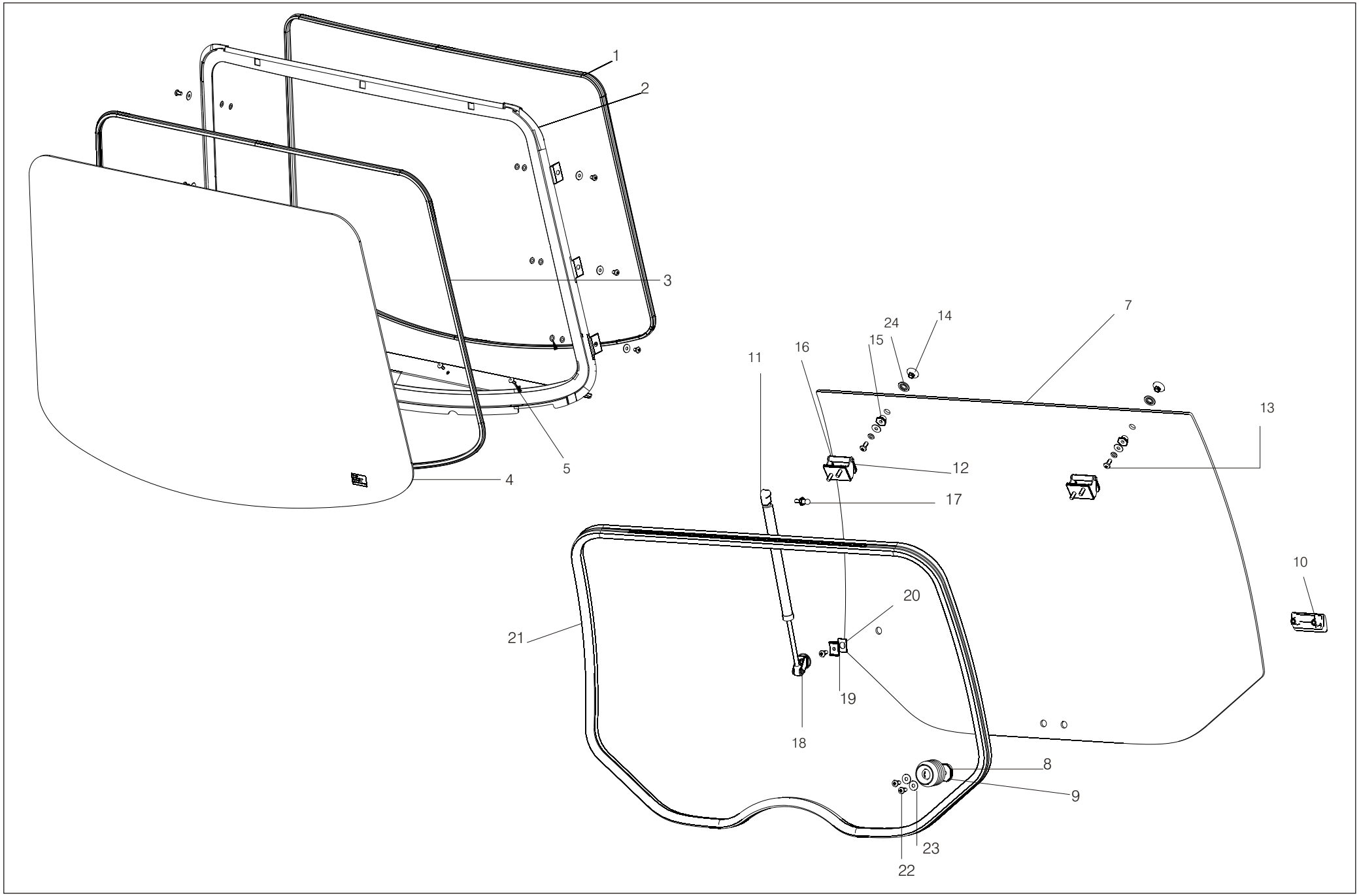

DESCRIPTION				REMARKS
KEY NO	PART NO	PART NAME	QTY	
1	741 01 11	SEAL WINDSHIELD FRAME INNER CW		
2	550 00 10	BONDED ASSY. WINDSHIELD FRAME CW		
3	741 01 09	SEAL WINDSHIELD OUTER CW		
4	741 01 08	CURVED WINDSHIELD GLASS		
5	041 01 02	RIVET ,POP, 4x12x15x15.52 LARGE DOME HEAD		
6	061 01 38	URETHANE ADHESIVE BETA SEAL V414 DOW		
7	744 01 02	GLASS- REAR HATCH WITH DEFOGGER	1	
8	743 00 07	LATCH ASSY. REAR HATCH MALE	1	
9	743 01 69	RUBBER SPACER - RR HATCH LATCH STRIKER MTG		
10	743 01 37	HANDLE OUTSIDE REAR HATCH GLASS	1	
11	743 01 03 A	STRUT - REAR HATCH	1	
12	743 00 02 B	HINGE-REAR HATCH ASSY	2	
13	006 01 10 A	SCREW MACHINE M6x1.0x10	3	
14	743 01 30	MUSHROOM NUT	3	
15	743 01 22	INSERT - RR HATCH HINGE	2	
16	743 01 05	SPACER - HATCH HINGE	2	
17	743 01 99 A	BALL STUD, 10 mm BALL, M6 THREAD	1	
18	743 01 40	BRACKET RR HATCH STRUT MOUNT	1	
19	743 01 18	INSERT - RR HATCH STRUT MTG	1	
20	743 01 19	GASKET RR HATCH STRUT MTG	1	
21	743 01 07 A	SEAL BULL REAR HATCH	1	
22	006 01 35 A	SCREW MAXHINE M6X1.0X35 TRUSH HEAD	2	
23	021 01 06 A	WASHER, FLAT, M6	2	
24	743 01 14 A	RUBBER WASHER - HATCH HINGE	2	

L =LEFT HAND DRIVE
R=RIGHT HAND DRIVE

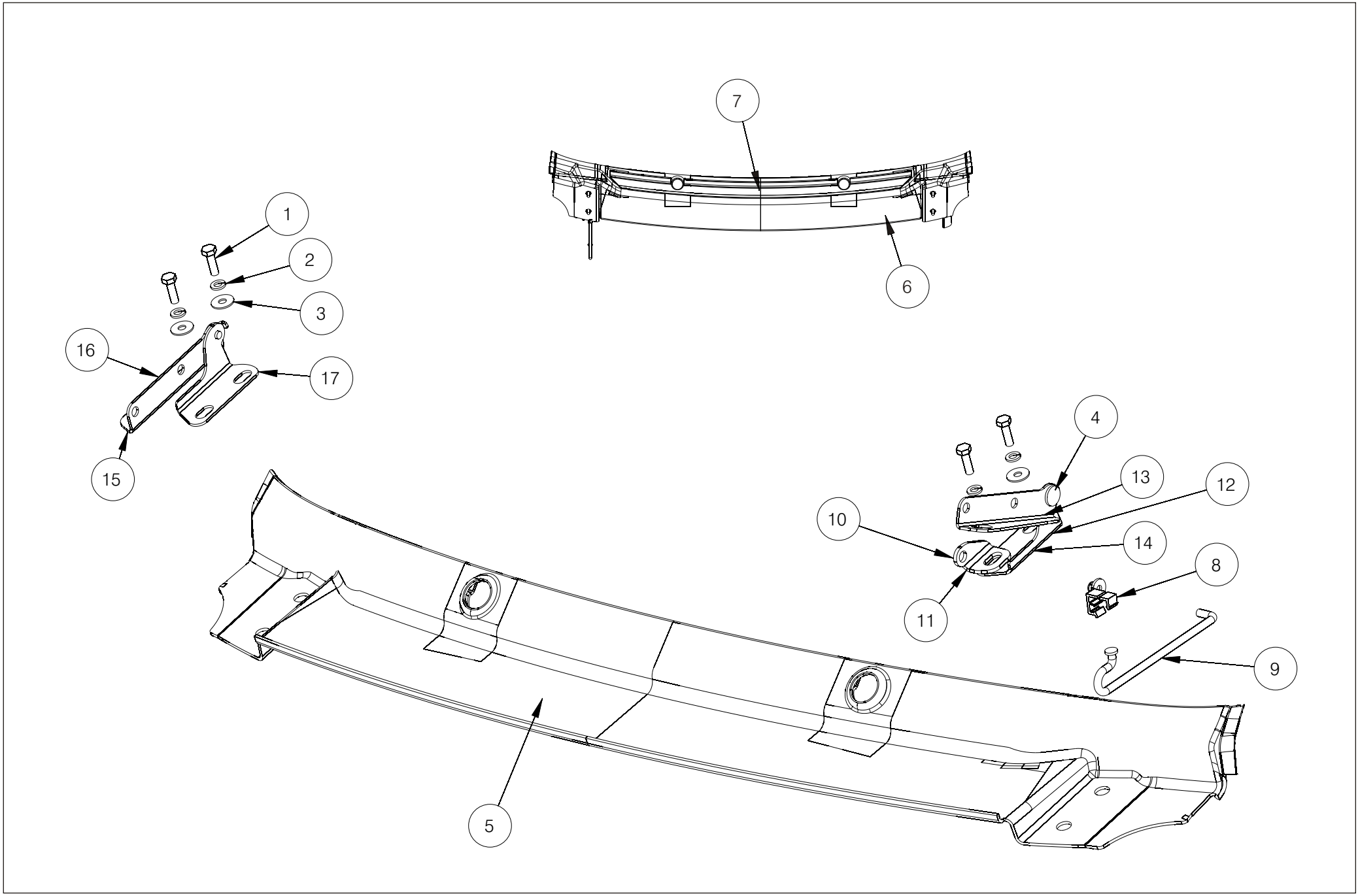
7
6
1
2
3
16
17
15
4
13
12
10
14
8
11
9
5

KEY NO	PART NO		DESCRIPTION	QTY.	REMARKS
1	013-01-20		BOLT, HEX, M6 X 1.0 X 20	4	
2	022-01-06		WASHER, LOCK, M6	4	
3	023-01-06		WASHER FLAT M6-LARGE	4	
4	046-01-01		SOLID RIVET	2	
5	681-00-09		BONDED ASSY - COWL PANEL - CW	1	
6	681-01-07		COWL PANEL-CW-RHD	1	
7	681-01-10		SECONDARY BONDED-PIECE	1	
8	680-01-06		NYLON GROMMET- PROP ROD	1	
9	682-01-07		PROP ROD - CW	1	
10	682-01-13		BRACKET PROP ROD	1	
11	682-10-10		HOOD HINGE ASSEMBLY- LH - CW	1	
12	682-10-15		WELDMENT - HOOD HINGE - CHASSIS SIDE - LH - CW	1	
13	682-11-03		HOOD HINGE PANEL SIDE - LH - CW	1	
14	682-11-04		HOOD HINGE CHASSIS SIDE - LH - CW	1	
15	682-20-10		HOOD HINGE ASSEMBLY - RH - CW	1	
16	682-21-03		HOOD HINGE PANEL SIDE - RH - CW	1	
17	682-21-04		HOOD HINGE CHASSIS SIDE - RH - CW	1	

L =LEFT HAND DRIVE
R=RIGHT HAND DRIVE

3 INTERIORS

3.10 INSTRUMENT PANEL ASSY

3.20 SEATS & SEAT BELT ASSY

3.30 GREEN HOUSE INTERIOR TRIM PANEL ASSY

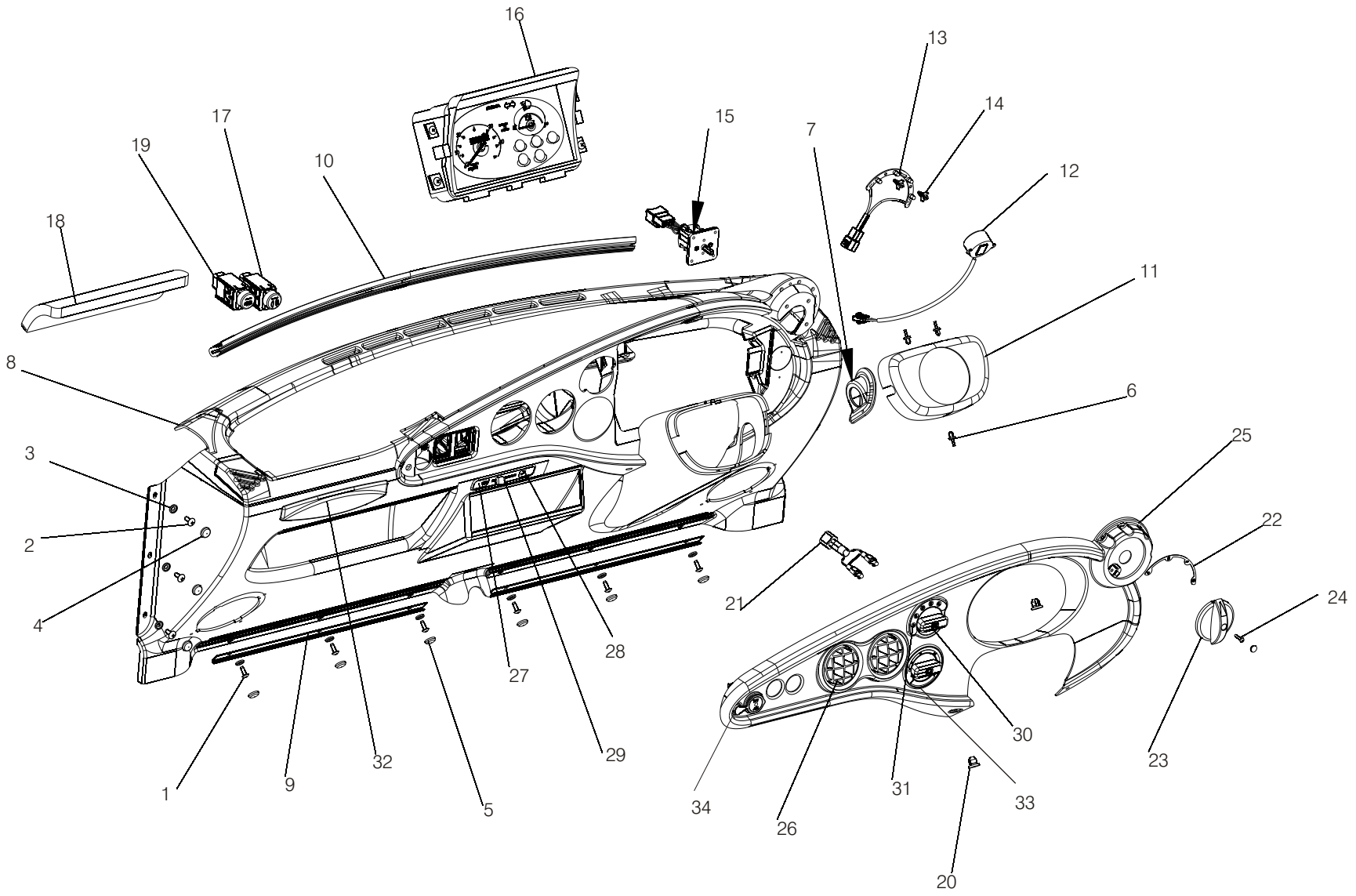
16
13
14
15
7
17
19
10
12
18
11
8
6
25
3
22
2
21
24
4
28
27
30
29
32
23
1
9
5
34
26
31
33
20

KEY NO	PART NO		DESCRIPTION	QTY.	REMARKS
1	051-01-15		SCREW, SELFTAP, 4.2 X 13	6	
2	051-01-20		SCREW, SELFTAP, 4.2 X 19	6	
3	082-01-11		CAP BASE-SCREW SELP TAP 4.2	12	
4	082-01-12		COVER CAP-SCREW SELF TAP 4.2	6	
5	082-01-25		COVER CAP-SCREW SELF TAP 4.2-TRUNCATED	6	
6	082-01-31		PUSH RIVET-PLASTIC STRG COLMN COVR MTG	3	
7	320-01-27		COVER - STEERING LOCK	1	
8	840-00-66		INSTRUMENT PANEL ASSY ACD - EURO A/C - CW	1	
9	841-01-19		SEAL -IP LOWER	2	
10	841-01-23		SEAL - IP - UPPER - CW	1	
11	841-01-30		COVER ST. COLUMN	1	
12	970-01-30		CHIME, 12V	1	
13	968-01-30		PCB FENR REAR ILLUMINATION	1	
14	082-01-33		PCB SUPPORT - LOCKING TYPE	2	
15	968-00-26		SWITCH ASSY, FENR	1	
16	843-00-07		IP CLUSTER ASSY - MILES	1	
16	843-00-08		IP CLUSTER ASSY - KM	1	
17	951-00-06		SWITCH ASSY - REAR FOG LAMP	1	
18	841-01-07		INSULATOR - IP GLOVE BOX	1	
19	951-00-07		SWITCH ASSY - REAR DEFOGGER	1	
20	082-01-30		NYLON INSERT - IP	3	
21	886-00-30		BULB ASSY - BACK LIGHT - BLOWER SWITCH	1	
22	841-01-32		DECAL - RNFB - SWITCH - ACD - RHD	1	
23	842-01-01		KNOB FENR SWITCH	1	
24	003-01-15		SCREW, MACHINE, M3X0.5X15, STAINLESS STEEL	4	
25	841-00-56		ASSY BONDED FACE PLATE - EURO - A/C	1	
26	884-01-02		LOUVRE - VENTILATOR	2	
27	886-01-11		DECAL - DEFROSTER - SLIDING MECHANISM	1	
28	886-01-12		DECAL - AIR BLOWER - SLIDING MECHANISM	1	
29	885-00-30		ASSY SLIDING MECHANISM (NEW) - RHD	1	
30	886-01-05		SWITCH - BLOWER	1	
31	886-01-07		DECAL - SWITCH BLOWER	1	
32	845-00-03		CUP HOLDER TRAY ASSY	1	
33	886-00-45		KNOB ASSY AC VARIABLE THERMOSTAT	1	
34	951-01-18		CAP- 12V SOCKET	1	

L =LEFT HAND DRIVE
R=RIGHT HAND DRIVE

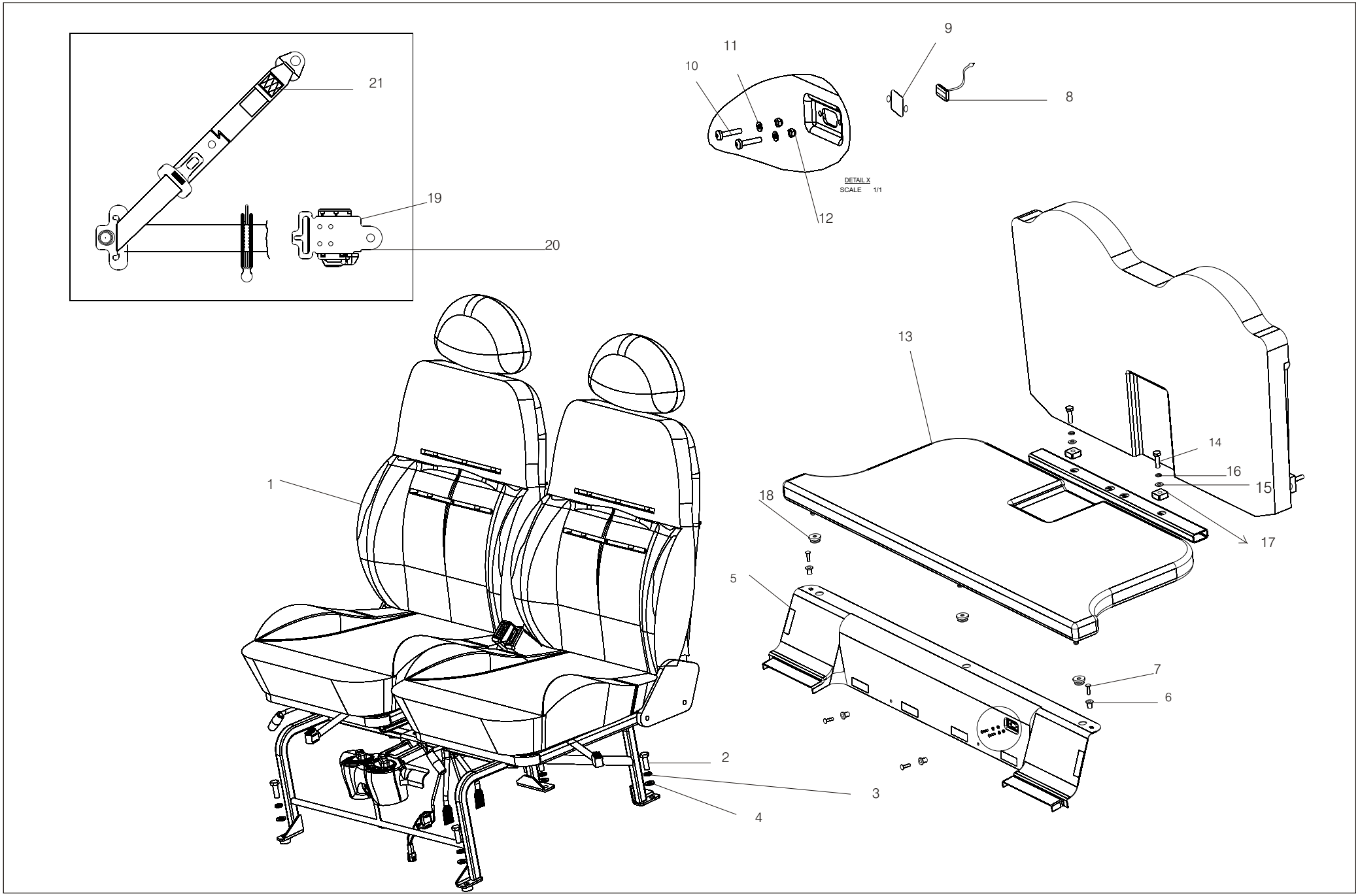
21
19
20
11
10
9
8
DETAIL X
SCALE 1/1
12
13
14
16
15
17
18
1
5
7
6
2
3
4

DESCRIPTION			REMARKS
KEY NO	PART NO	PART NAME	QTY	
1	862 00 00 A	FRONT SEAT ASSY	1	
1	863 00 00	FRONT SEAT ASSY - CCS	1	
1	865 00 01	FRONT SEAT ASSY LEATHER	1	
2	015 01 30 D	BOLT, HEX, M10 x 1.50 x 30	4	
3	022 01 10 A	WASHER, LOCK M10	4	
4	021 01 10 A	WASHER, FLAT, M10	4	
5	864 01 62 B	TRIM SEAT BOTTOM	1	
6	007 01 25	WELL NUT M5x0.8	6	
7	005 01 20	SCREW MACHINE M5 X .8 X 20 PAN HEAD	6	
8	924 00 15 C	WIRE HARNESS, DIAGNOSTIC PORT	1	
9	901 01 21	FACE PLATE, CONNECTOR DB9	1	
10	003 01 15	SCREW, MACHINE, M3x0.5x15, STAINLESS STEEL	2	
11	021 01 03 C	WASHER, FLAT, M3	2	
12	032 01 03 C	NUT, NYLOCK, M3 x .5	2	
13	867 00 00	REAR SEAT ASSEMBLY	1	
13	866 00 01	REAR SEAT ASSY LEATHER	1	
14	014 01 30	BOLT, HEX, M8 x 1.25 x 30	2	
15	021 01 08	WASHER, FLAT, M8	2	
16	022 01 08 A	WASHER, LOCK M8	2	
17	867 01 33	SPACER REAR SEAT MTG	2	
18	867 01 07	GROMMET SEAT LOCATER	1	
19	864 10 50	SEAT BELT ASSEMBLY- FRONT - LH	1	SUPPLIED AS A SET
20	864 20 50	SEAT BELT ASSEMBLY - FRONT - RH	1	SUPPLIED AS A SET
21	864 00 06	REAR SEAT BELT LH	1	SUPPLIED AS A SET

L =LEFT HAND DRIVE
R=RIGHT HAND DRIVE

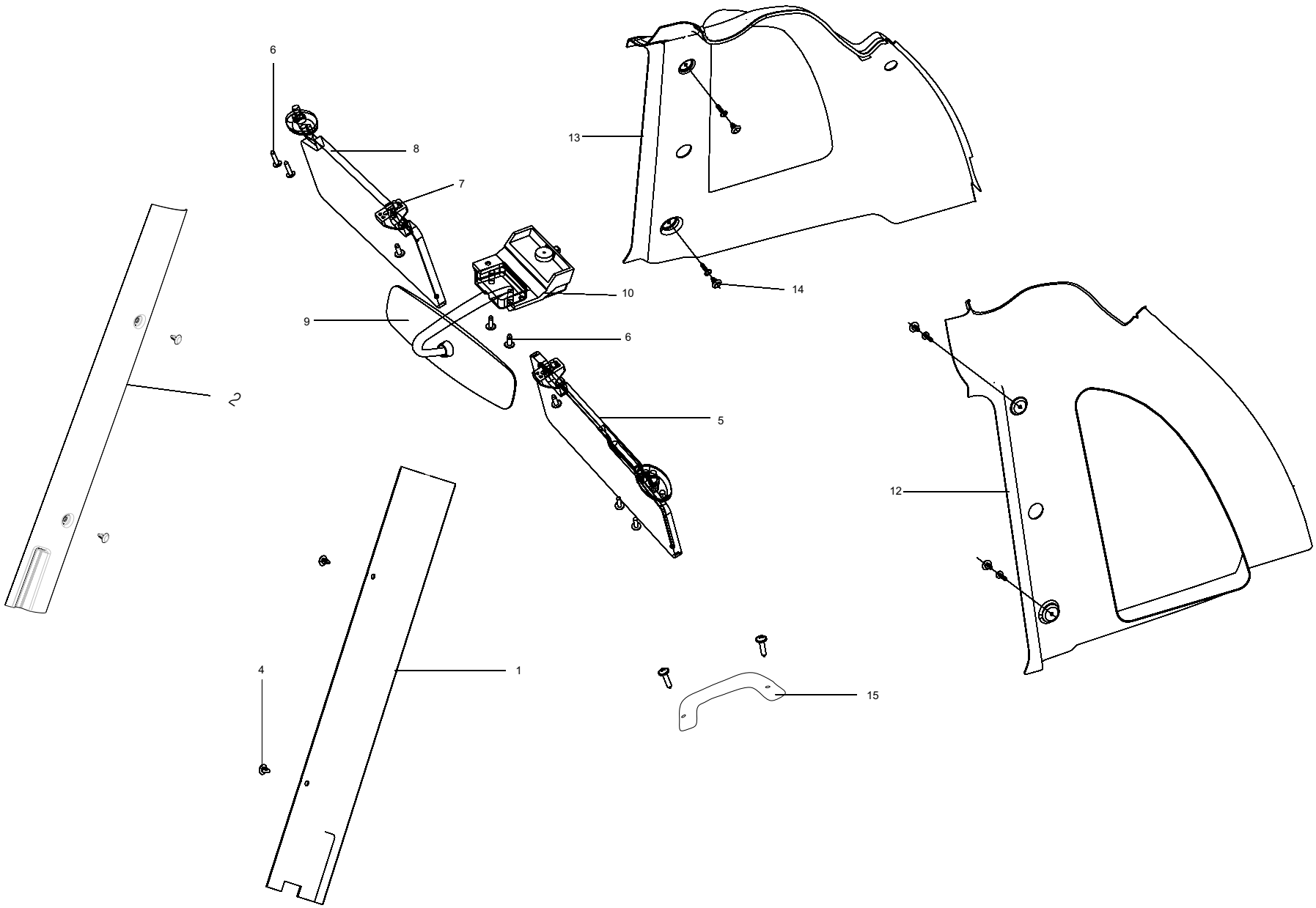
6
8
7
13
14
10
9
6
2
5
12
4
1
15

DESCRIPTION			REMARKS
KEY NO	PART NO	PART NAME	QTY
1	868 11 01 C	TRIM PANEL , A PILLAR - LH	1
1	868 11 02	TRIM PANEL , A PILLAR - LH , SOFT FEEL	1
2	868 21 01 C	TRIM PANEL , A PILLAR - RH	1
2	868 21 02	TRIM PANEL , A PILLAR - RH , SOFT FEEL	1
3	051 01 14	SCREW, SELF TAP 4.2X13 PAN HEAD	6
4	082 01 06	CLIP PLASTIC, PUSH TYPE(White Colour)	4
5	891 11 01	SUN VISOR -LH	1
6	051 01 20	SCREW, SELFTAP, 4.2 X 19	12
7	891 01 05	SUNVISOR CLIP	2
8	891 21 01	SUN VISOR-RH	1
9	892 01 01	MIRROR INTERIOR REAR VIEW	1
9	892 01 02	MIRROR INTERIOR - REAR VIEW - ANTIGLARE	1
10	968 01 01	DOME LIGHT	1
11	968 01 02	BULB, DOME LIGHT, 12V, 5W	1
12	868 11 05 B	TRIM PANEL , BC PILLAR - LH	1
13	868 21 05	TRIM PANEL , BC PILLAR - RH	1
14	082 01 16	CLIP MUSHROOM HEAD -LIGHT GRAY(White Painted)	4
15	871 01 05	GRAB HANDLE	1

L =LEFT HAND DRIVE
R=RIGHT HAND DRIVE

4 ELECTRICALS AND ELECTRONICS

4.10 WIPER AND HORN ASSY

4.20 MOTOR ASSY

4.30 POWER PACK SYSTEM

4.40 WIRE HARNESS

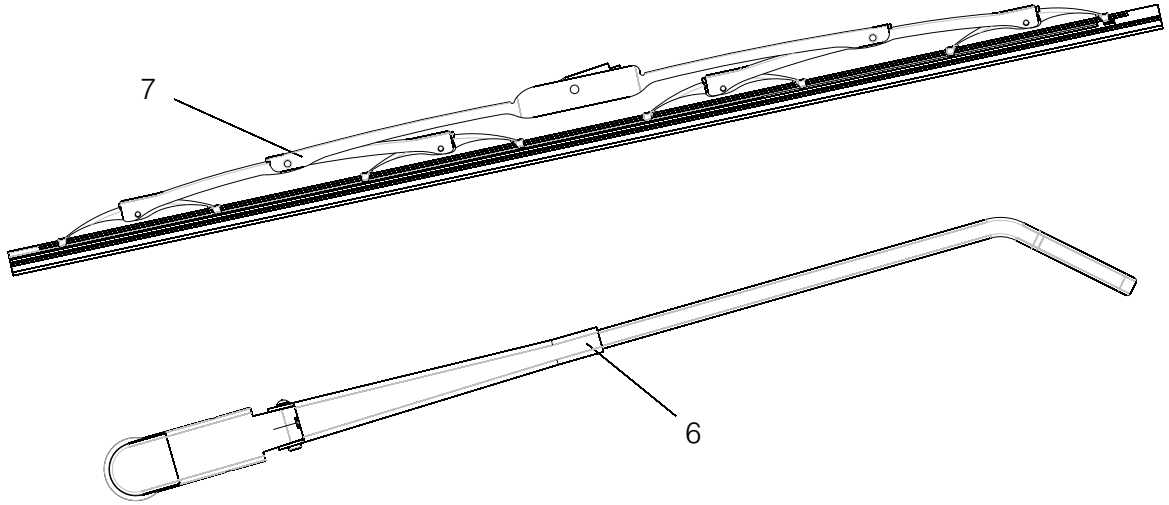
7
6

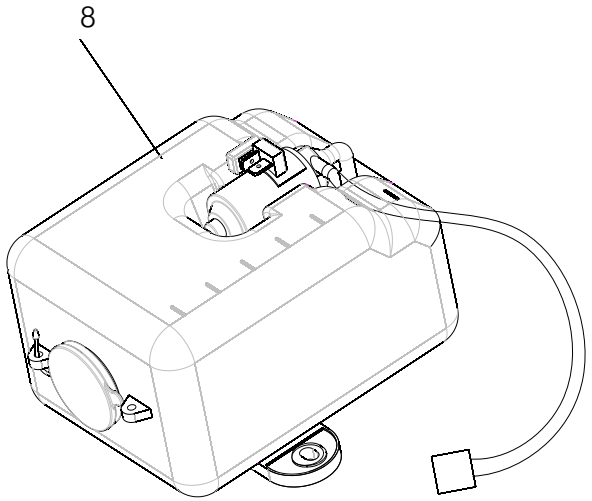
8

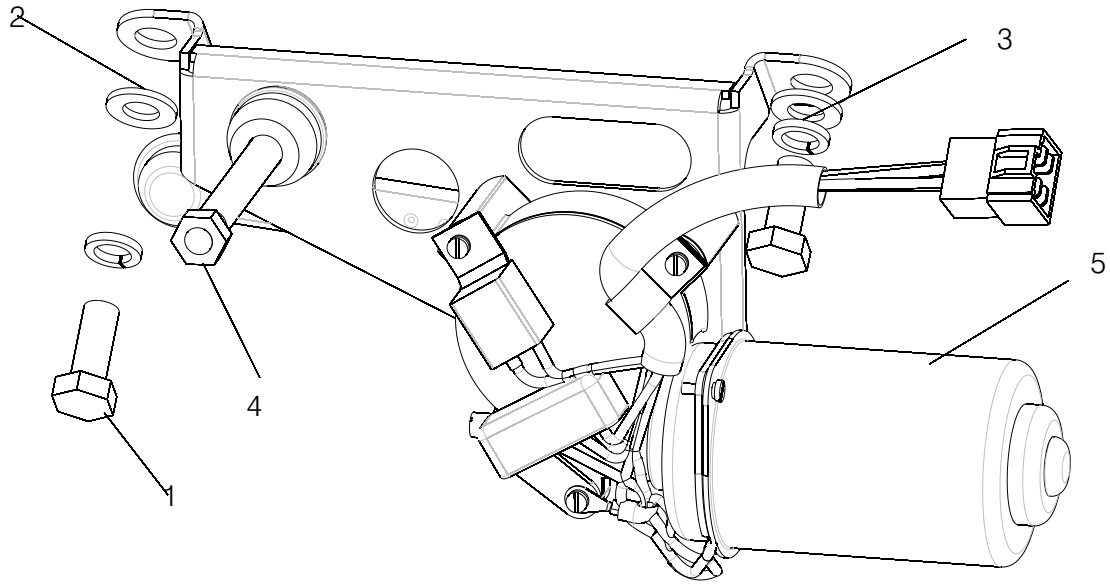
2
3
5
4
1

KEY NO	PART NO		DESCRIPTION	QTY.	REMARKS
1	015-01-25		BOLT, HEX, M10 X 1.50 X 25	2	
2	021-01-10		WASHER, FLAT, M10	2	
3	022-01-10		WASHER, LOCK, M10	2	
4	031-01-21		NUT HEX THIN M8x1.25	1	
5	690-00-41		WIPER MOTOR & LINKAGE ASSY. COMP.-CW-RHD	1	
6	691-00-05		WIPER ARM ASSY - CW - RHD	1	
7	692-00-15		WIPER BLADE ASSY	1	
8	690-00-02		ASSY WINDSHIELD WASHER UNIT	1	

L =LEFT HAND DRIVE
R=RIGHT HAND DRIVE

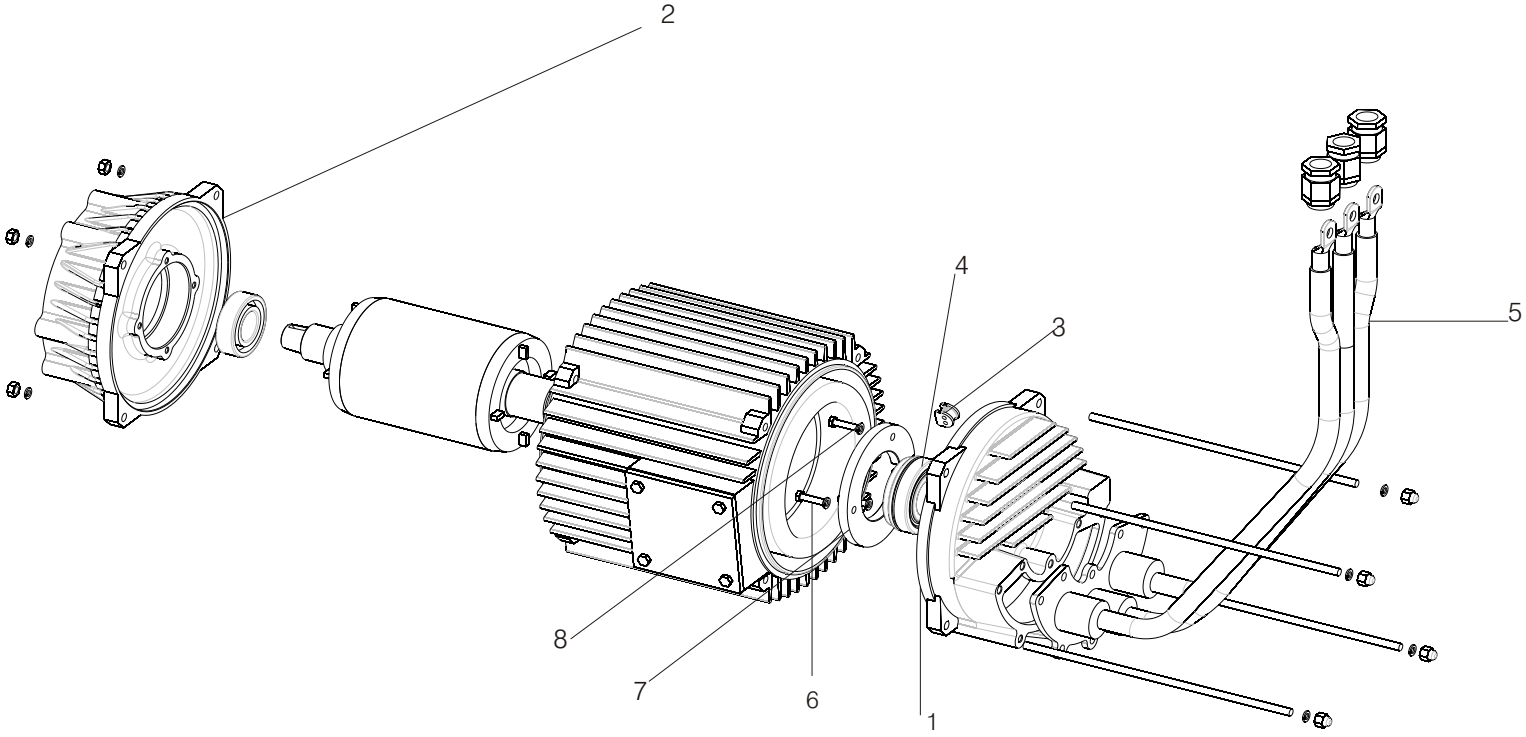
2
4
3
5
8
7
6
1

DESCRIPTION				REMARKS
KEY NO	PART NO	PART NAME	QTY	
1	921 01 05	FLANE NON DRIVE END	1	
2	921 01 06	DEFLANGE- AC MOTOR WITH FLEXI COUPLING	1	
3	921 01 11	O RING (PE)	1	
4	414 01 31	BEARING NON DRIVE	1	
5	921 01 11	WIRE GROMMET	1	
6	921 01 07	AC MOTOR CASTE		
7	018 01 39	HEX SOCKET HEAD CAP BOLT	1	
8	924 00 69	ASSY CLAMP PLATE SENSOR BEARING	1	
		HEN SOCKET -HEAD CAP BOLT	1	
9	921 01 07	A/C INDUCTION MOTOR	1	

	L =LEFT HAND DRIVE
	R=RIGHT HAND DRIVE

4.30 POWER PACK SYSTEM

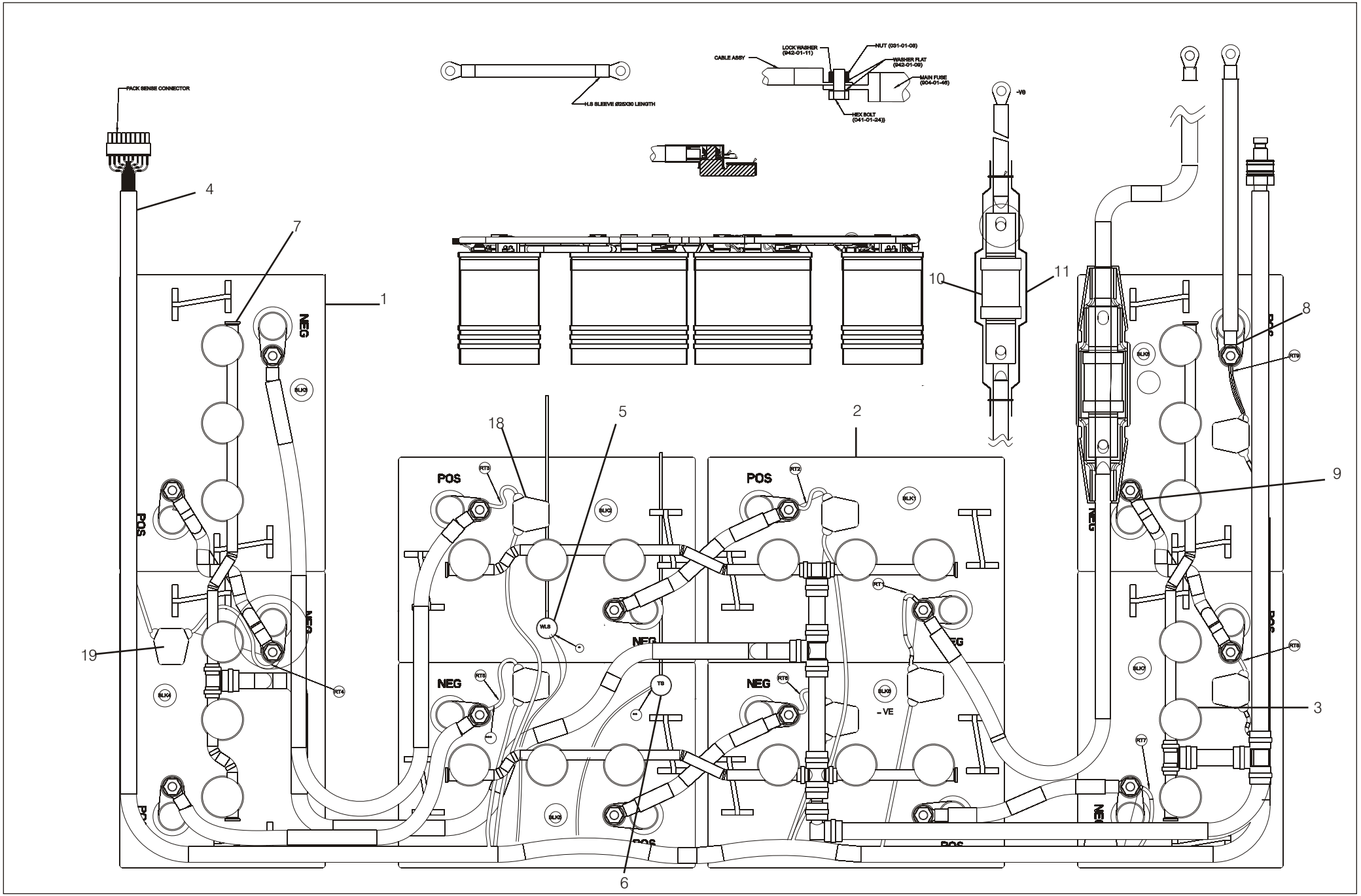

DESCRIPTION			
KEY NO	PART NO	PART NAME	QTY	REMARKS
1	910 00 06 B	POWER PACK ASSY - TROJAN -ACD	1	
2	911 01 03	BATTERY, 6 V, TROJAN	8	
3	915 01 06	FLOAT	24	COMES ALONG BATTERY PACK
4	924 00 60	PACK SENSE HARNESS	1	COMES ALONG BATTERY PACK
5	915 01 14	WATER LEVEL SENSOR	1	
6	924 01 60	BATTERY TEMPERATURE SENSOR	1	
7	915 01 32	END PLUGS	8	COMES ALONG BATTERY PACK
8	912 01 09	PLASTIC CAPS FOR POSITIVE TERMINAL	8	COMES ALONG BATTERY PACK
9	912 01 10	PLASTIC CAPS FOR NEGATIVE TERMINAL	8	COMES ALONG BATTERY PACK
10	904 01 46 A	MAIN FUSE	1	
11	851 01 10	COVER MAIN FUSE -TOP&BOTTOM	1	
12	014 01 24	BOLT HEX M8X1.25X25	2	
13	942 01 09 A	FLAT WASHER M8-NICKLE PLATED	20	
14	942 01 11 A	WASHER, LOCK, M8, SPRING STEEL(NICKEL PLATED)	20	
15	031 01 08 A	NUT HEX M8X1.25	18	
16	909 01 07	CABLE TIES 150mm	16	
17	915 01 18	RUBBER GROMMET-WATER/TEMP SENSOR	2	
18	991 01 13	BLADE FUSE-3A MINIATURE	8	
19	991 01 14	BLADE FUSE-5A MINIATURE	1	

L =LEFT HAND DRIVE
R=RIGHT HAND DRIVE

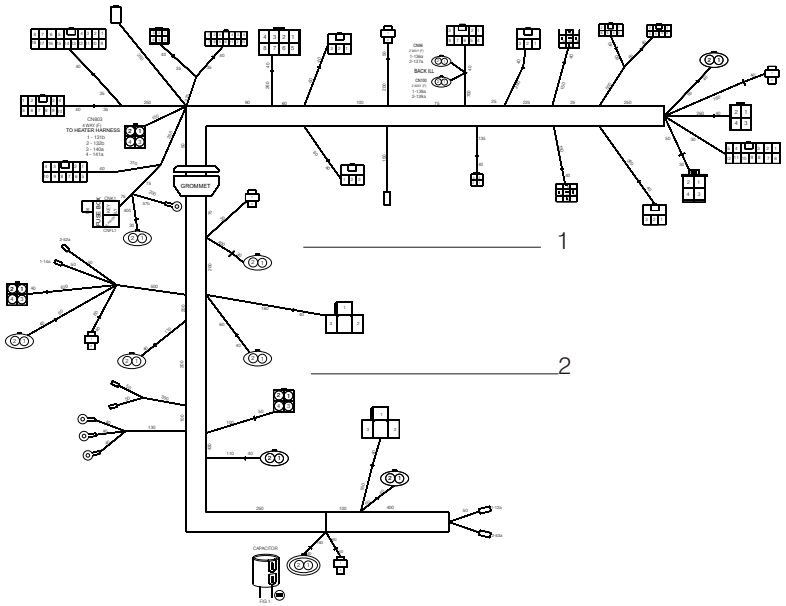

LIGHTING HARNESS-ACD

UFUSE BOX

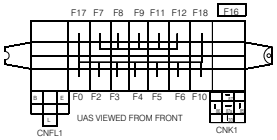

FUSE RATINGS:

FUSE NO	RATING
F5,F9 & F16 , F18	5A
F3	15A
F0,F4 & F10	10A
F11	3A
F2,F6,F7, F8 & F12	7.5A
F17	20A

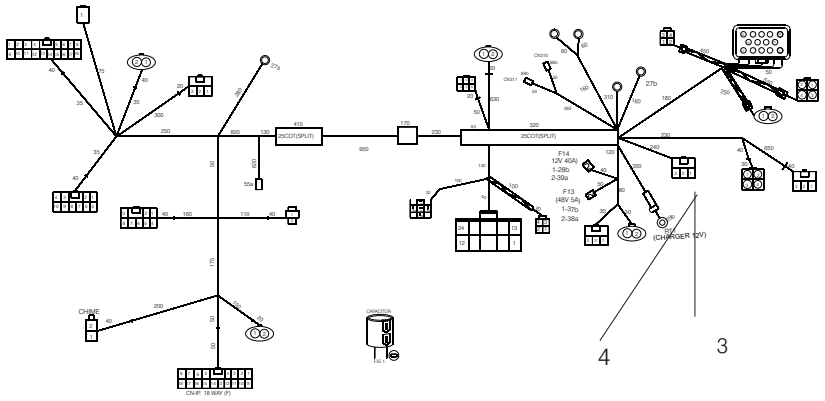

WIRING H/N. MAIN ACD

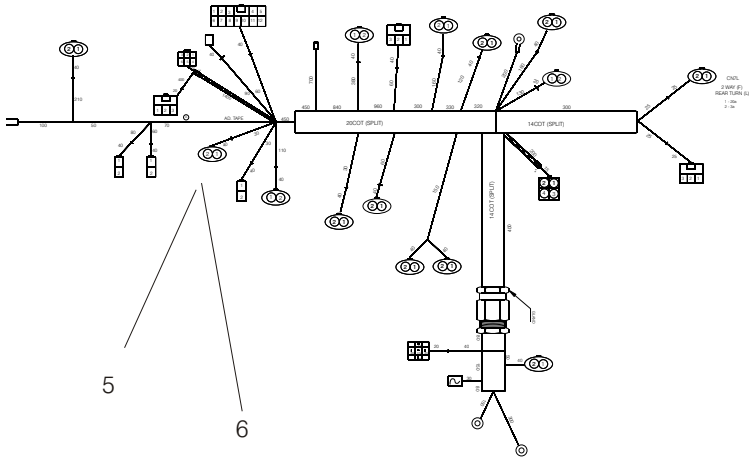

REAR LIGHTING AND HEATER HARNESS-ACD

DESCRIPTION				REMARKS
KEY NO	PART NO	PART NAME	QTY	
1	924 00 08	LIGHTING HARNESS ACD-LHD		
2	924 00 09	LIGHTING HARNESS ACD-RHD		
3	924 00 11	MAIN HARNESS ACD-LHD		
4	924 00 04	MAIN HARNESS ACD-RHD		
5	924 00 22	REAR LIGHTING & HEATER HARNESS-LHD		
6	924 00 23	REAR LIGHTING & HEATER HARNESS-RHD		

L =LEFT HAND DRIVE
R=RIGHT HAND DRIVE

RS= REVA STANDARD , RA= REVA A/C , RC= REVA CLASSE

5 HEATER AND AIR-CONDITIONING

5.10 BLOWER ASSY COMPLETE

5.20 AIR CONDITIONING ASSY COMPLETE

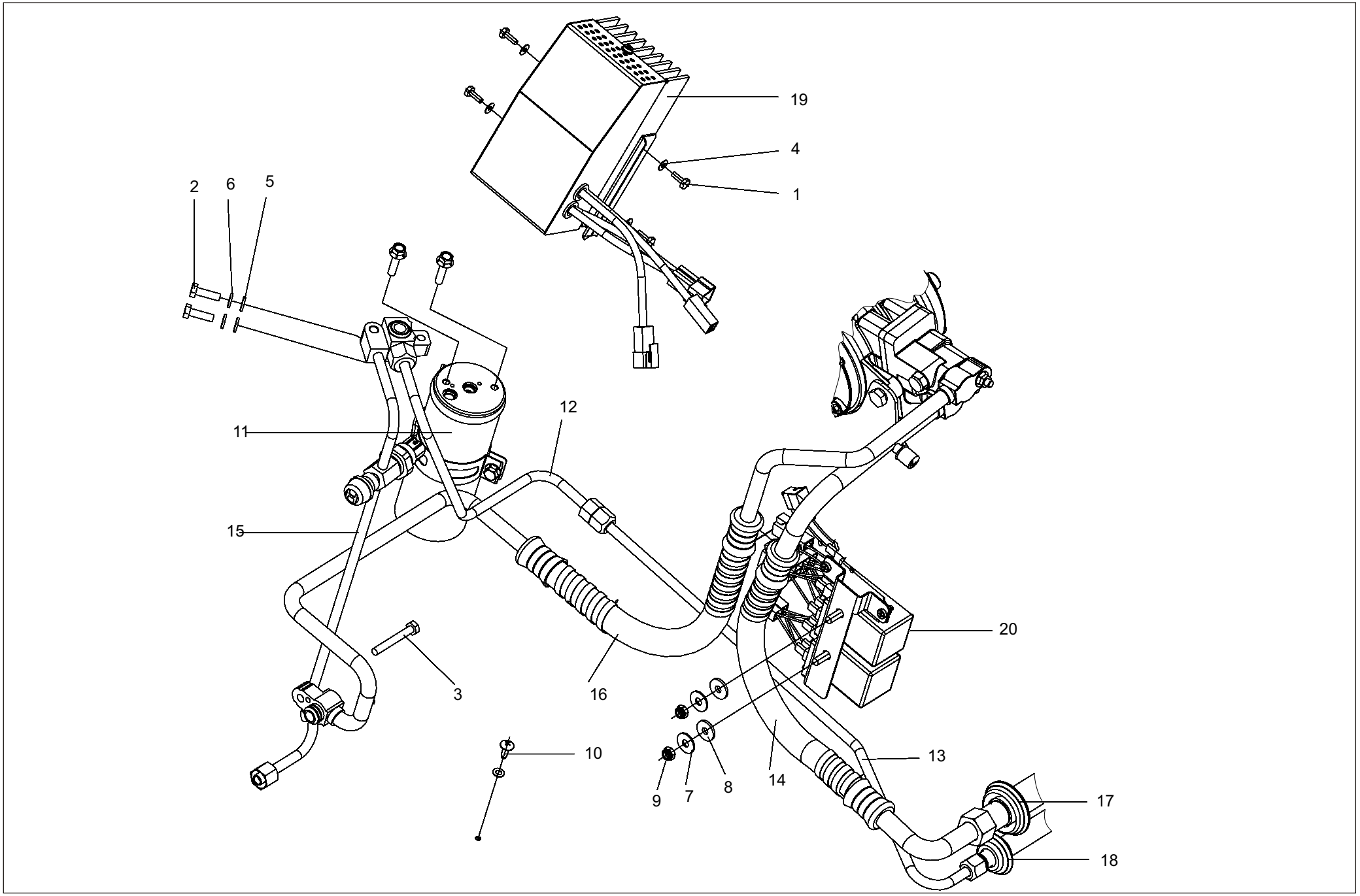
19
4
1
2
6
5
11
12
15
20
3
16
10
13
9
7
8
14
17
18

DESCRIPTION			REMARKS
KEY NO	PART NO	PART NAME	QTY
1	012 01 12	BOLT, HEX, M4X0.7X12	4
2	013 01 20	BOLT, HEX, M6X1.0X20	6
3	013 01 45	BOLT, HEX, M6X1.0X45	1
4	021 01 04	WASHER FLAT M4	4
5	021 01 06	WASHER FLAT M6	7
6	022 01 06	WASHER LOCK M6	5
7	023 01 06	WASHER FLAT M6-LARGE	2
8	025 01 06	RUBBER WASHER 6X18X2	2
9	032 01 06	NUT NYLOCK M6X1.0	4
10	051 01 15	SCREW SELFTAP 4.2X13	1
11	697 00 01	RECIEVER AND DRIER ASSY	1
12	697 00 11	PIPE ASSY - RECIEVER OUTLET TO INTERMEDIATE CONNECTOR	1
13	697 00 12	PIPE ASSY - INTERMEDIATE CONNECTOR TO EVAPORATOR INLET	1
14	697 00 13	PIPE ASSY - EVAPORATOR OUTLET TO COMPRESSOR INLET	1
15	697 00 14	PIPE ASSY - CONDENSOR OUTLET TO RECIEVER INLET	1
16	697 00 15	PIPE ASSY - COMPRESSOR OUTLET TO CONDENSOR INLET	1
17	698 01 11	GROMMET - EVAPORATOR - PIPE OUTLET	1
18	698 01 12	GROMMET - EVAPORATOR - INLET	1
19	889 00 02	A/C MOTOR CONTROLLER ASSY	1
20	889 00 08	RELAY ASSY A/C	1

L =LEFT HAND DRIVE
R=RIGHT HAND DRIVE

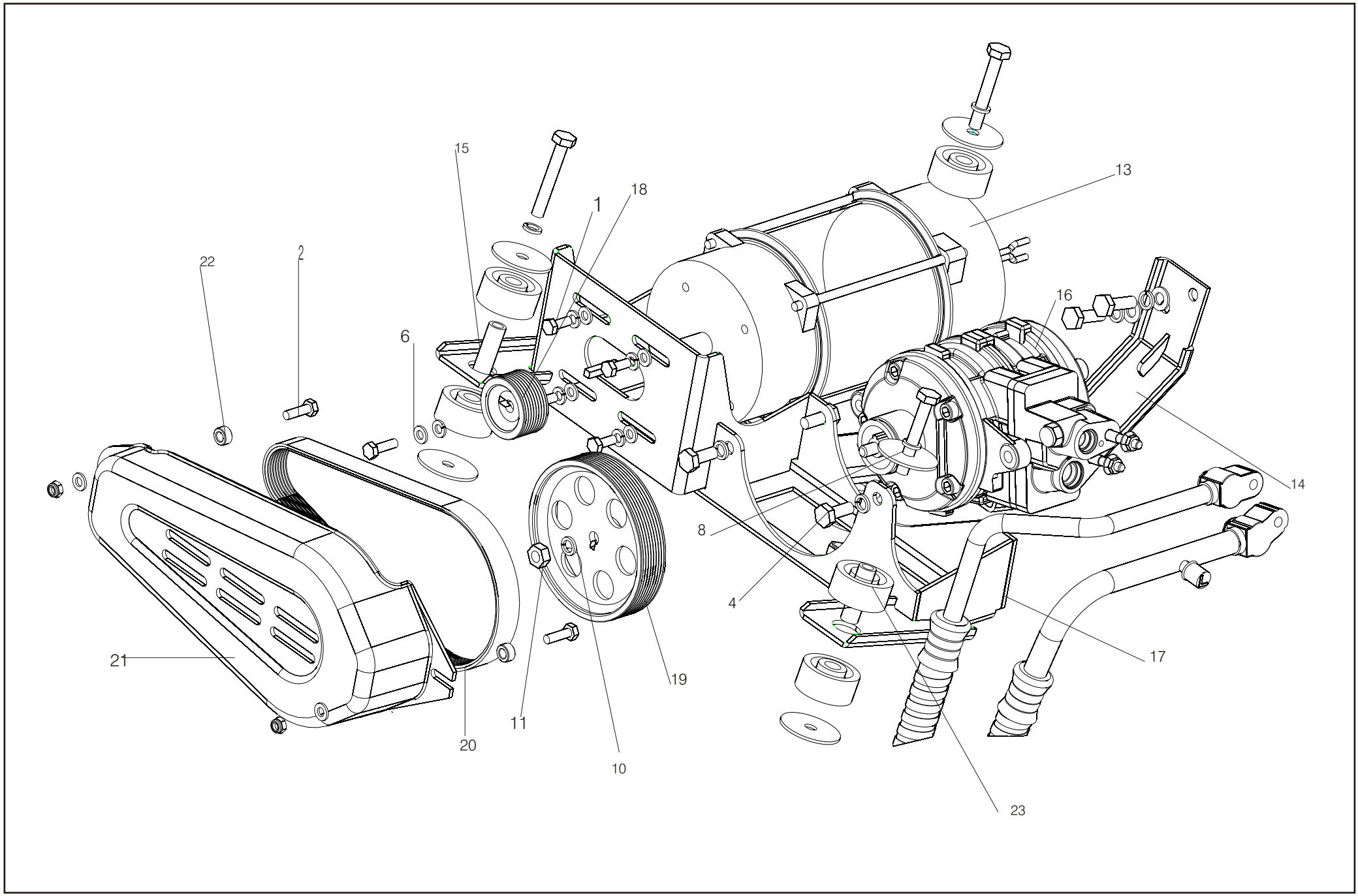
15
18
1
13
22
2
16
6
14
8
4
17
21
19
11
20
10
23

DESCRIPTION			REMARKS
KEY NO	PART NO	PART NAME	QTY
1	013 01 15	BOLT HEX M6X1.0X15	4
2	013 01 20	BOLT HEX M8X1.25X20	4
3	004 01 08	SCREW MACHINE M4X0.7X8	8
4	014 01 60	BOLT HEX M10X1.50X20	4
5	021 01 04	WASHER FLAT M4	8
6	021 01 06	WASHER FLAT M6	4
7	021 01 08	WASHER FLAT M8	1
8	021 01 09	FLAT WASHER SPECIAL	4
9	021 01 06	WASHER LOCK M6	3
10	022 01 08	WASHER LOCK M8	8
11	031 01 08	NUT HEX M8X1.25	1
12	031 01 12	NUT HEX M12X1.50	4
13	694 00 10	ASSY PMDC MOTOR A/C(ROTOMAG)	1
14	694 00 30	WELDMENT BRKT - REARSUPPORTA/C-RHD	1
15	694 01 21	SLEEVE-A/C MTG	1
16	695 00 01	COMPRESSOR ASSY	1
17	694 00 30	WELDMENT BRKT - A/C MOTOR & COMPRESSOR MTG-RHD	1
18	698 01 10	PULLY MOTORS	
19	698 01 06	PULLEY - COMPRESSOR	1
20	698 01 07	V - BELT	1
21	698 01 08	PLASTIC COVER - V-BELT	1
22	698 01 17	SPACER V-BELT COVER MTG	3
23	698 01 06	ISOLATOR-A/C MOTOR&COMPRESSOR MTG	1

L =LEFT HAND DRIVE
R=RIGHT HAND DRIVE

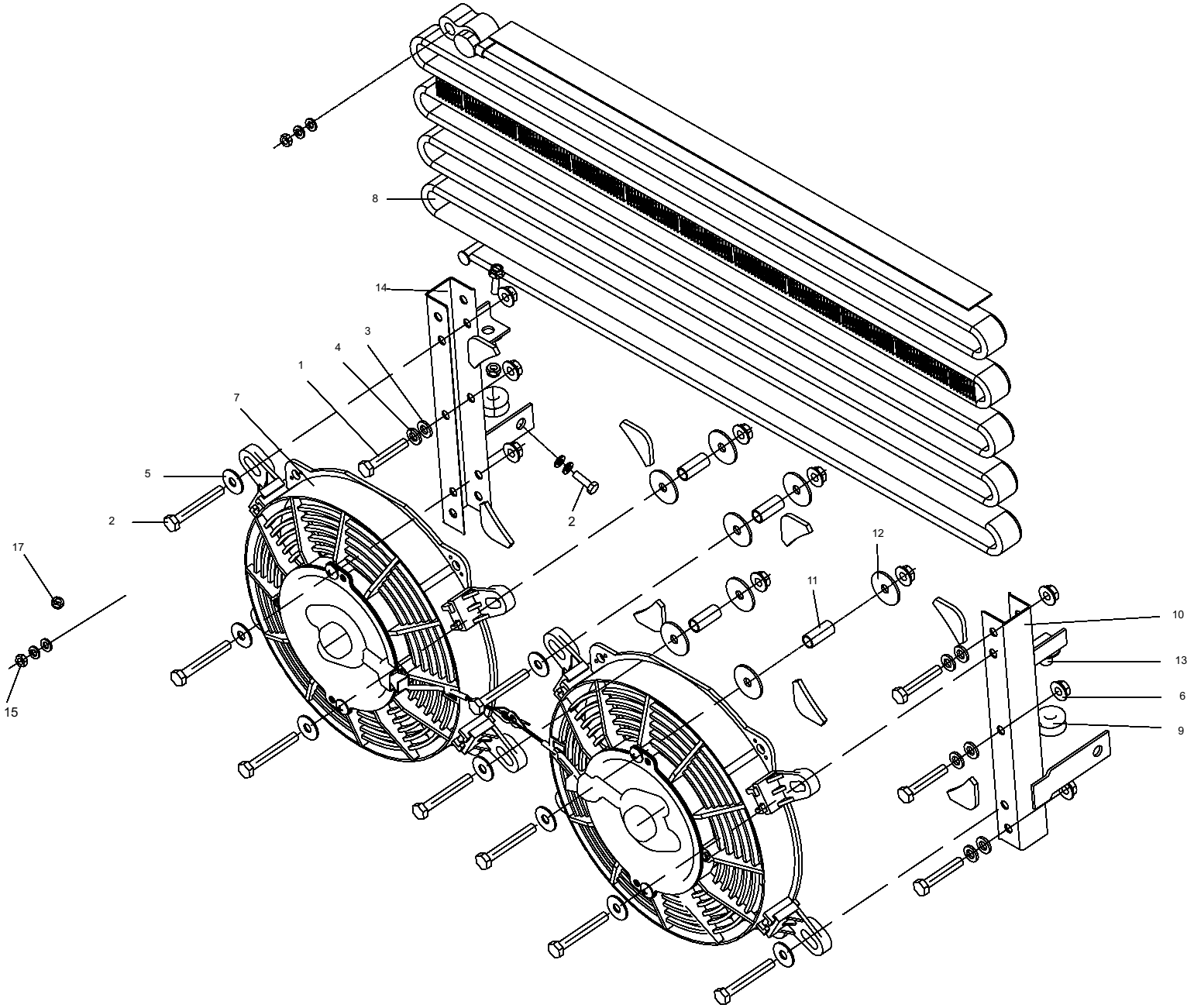
8
14
3
4
1
7
5
2
2
17
15
12
11
10
13
6
9

DESCRIPTION				REMARKS
KEY NO	PART NO	PART NAME	QTY	
1	013 01 35	BOLT HEX M6X1.0X35	4	
2	013 01 45	BOLT HEX M6X1.0X45	8	
3	021 01 06	WASHER FLAT M6	4	
4	022 01 06	WASHER LOCK M6	4	
5	023 01 06	WASHER FLAT M6 - LARGE	8	
6	030 01 26	HEX FLANGE NUT M6	12	
7	696 00 05	FAN ASSY - CONDENSOR	2	
8	696 01 02	CONDENSOR	1	
9	696 01 11	RUBBER BUSH - CONDENSOR MTG	2	
10	696 01 17	COLLAR BUSH - CONDENSOR MTG	2	
11	696 01 18	SPACER - FAN MTG	4	
12	696 01 19	WASHER FLAT M6 - LARGE SPECIAL	8	
13	696 10 06	WELDMENT CHANNEL LH - CONDENSOR MTG1	1	
14	696 20 06	WELDMENT CHANNEL RH - CONDENSOR MTG1	1	
15	031 01 06	NUT HEX M6X1.0	1	
16	053 01 28	HEX, HEAD SELF DRILL SCREW 4.8X25	2	
17	032 01 06	NUT NYLOCK M6X1.0	3	

L =LEFT HAND DRIVE
R=RIGHT HAND DRIVE

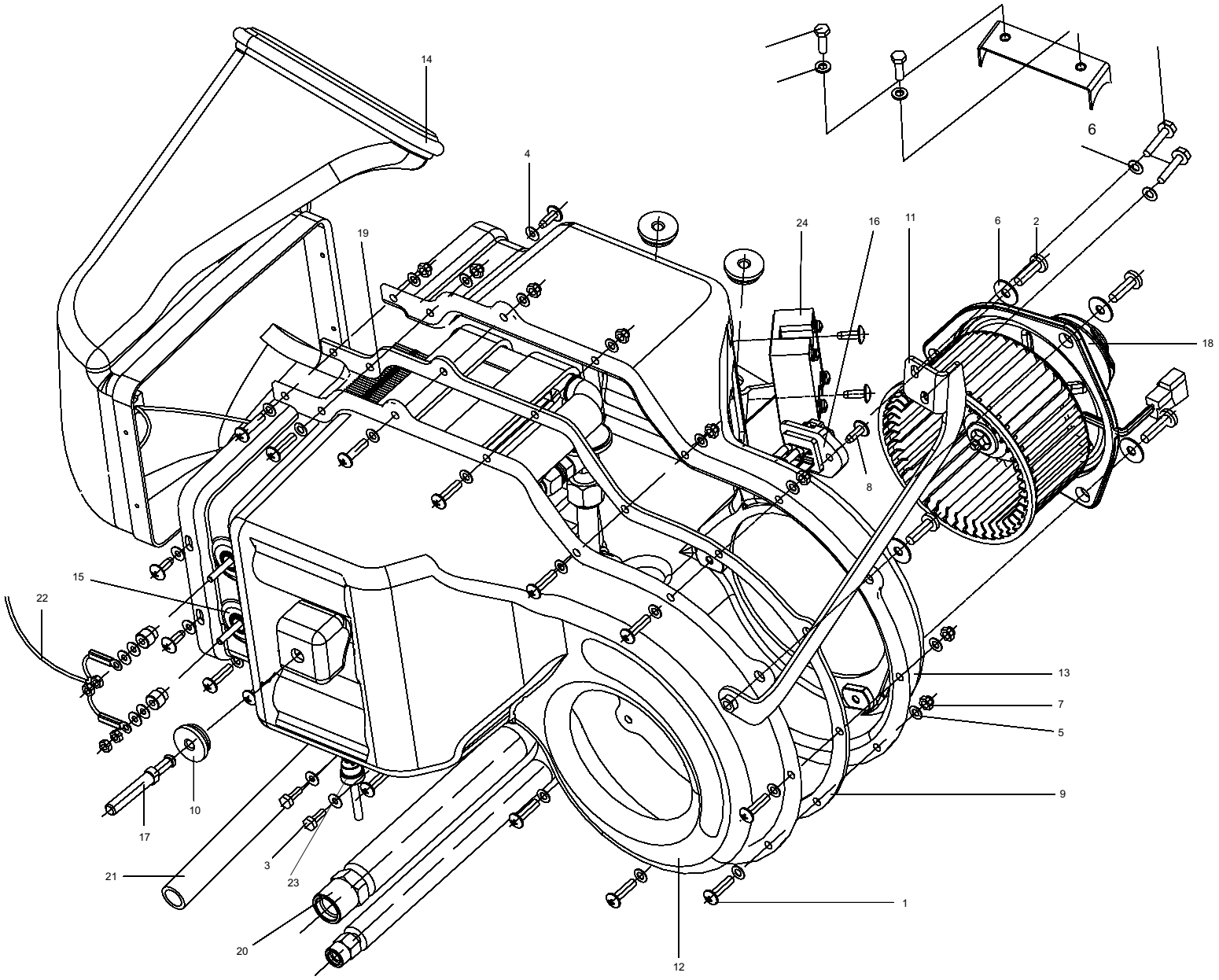
14
4
19
24
16
11
6
2
6
18
8
15
22
13
7
5
9
10
17
3
23
21
20
12
1

DESCRIPTION			REMARKS
KEY NO	PART NO	PART NAME	QTY
1	005 01 20	SCREW MACHINE M5X0.8X20 PAN HEAD	14
2	006 01 20	SCREW MACHINE M6X1.0X20	4
3	012 01 12	BOLT HEX M4X0.7X12	2
4	021 01 04	WASHER FLAT M4	6
5	021 01 05	WASHER FLAT M5	28
6	023 01 06	WASHER FLAT M6 - LARGE	4
7	032 01 05	NUT NYLOCK M5X0.8	14
8	051 01 15	SCREW SELFTAP 4.2X13	7
9	087 01 18	TAPE, SINGLE SIDED 3MM(T) X 15MM(W) X 6MTRS(L)	1
10	641 01 27	GROMMET TAIL LAMP MOUNT	3
11	880 00 41	WELDMENT BRKT - BLOWER MTG	1
12	880 00 50	BONDED ASSY CASING FAN SIDE	1
13	880 00 51	BONDED ASSY CASING MOTOR SIDE	1
14	880 00 60	OUTLET ASSY BLOWER	1
15	880 01 06	CERAMIC WASHER	1
16	880 01 09	RESISTOR - BLOWER - DEFROSTER	1
17	880 01 41	LOCATED PEG - BLOWER MTG	1
18	881 00 10	MOTOR & IMPELLER ASSY - A/C BLOWER	1
19	882 00 01	HEATER ASSY - DEFROSTER	1
20	887 00 01	EVAPORATOR ASSY	1
21	887 01 15	DRAIN PIPE A/C	1
22	924 00 85	WIRING HARNESS HEATER END	1
23	952 00 01	THERMOSTAT ASSY - HEATER DEFROSTER	1
24	970 01 15	RELAY - HEATER	1
25	053 01 20	SCREW SELF DRILL 4.2X19	2

L =LEFT HAND DRIVE
R=RIGHT HAND DRIVE

6 ACCESSORIES

6.10 MATS & CHARGE PORT HANDLE ASSY
- 6.11 Floor Mat- Regular
- 6.12 F loor Mat-Deluxe
- 6.13 C arpet Assembly Front -Regular
- 6.14 M ud Flaps
- 6.15 W heel caps

6.20 CENTRAL DOOR LOCKING SYSTEM (AUTOCOP)

6.30 ASSY STEREO SYSTEM

6.40 WHEELS AND SPARE ASSY

6.50 DECALS

6.10 MATS AND CHARGEPORT HANDLE ASSY

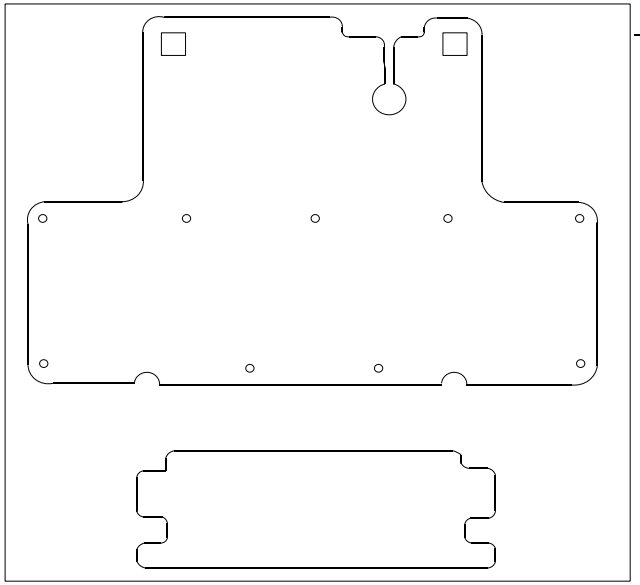

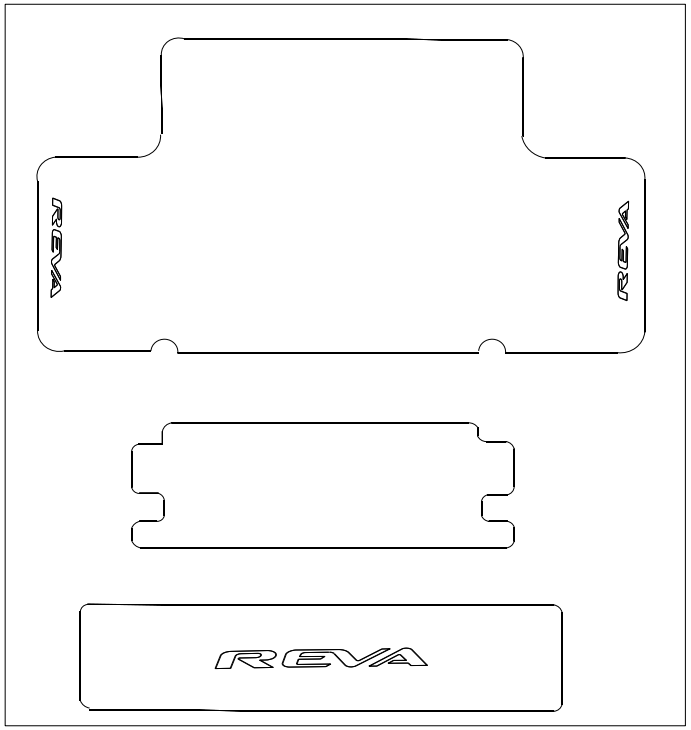

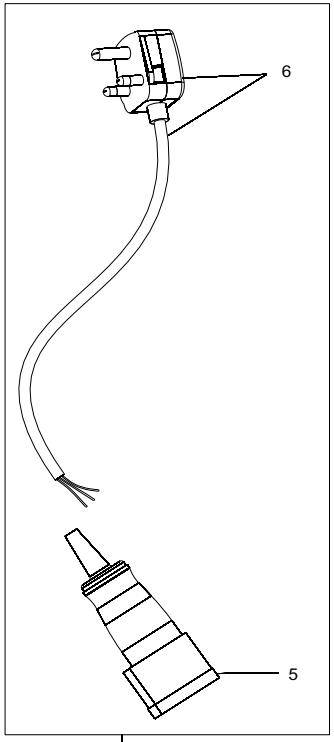

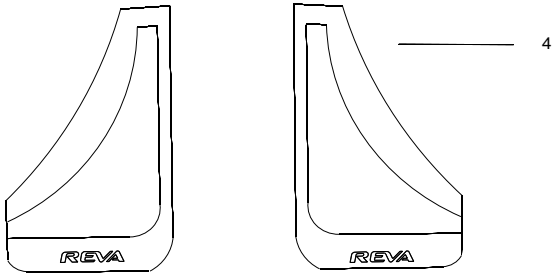

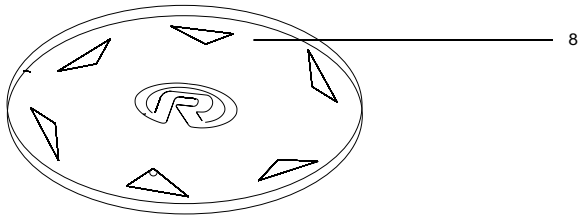

DESCRIPTION				REMARKS
KEY NO	PART NO	PART NAME	QTY	
1	893 00 01	CARPET ASSY FRONT - REGULAR	1	
1	893 01 01	CARPET ASSY FRONT - DELUX	1	
2	893 01 04	FLOOR MAT - REGULAR	1	
3	893 01 11	FLOOR MAT -DELUX	1	
4	733 11 05	MUD FLAP - LH	1	
4	733 11 06	MUD FLAP - REAR -LH	1	
4	733 21 05	MUD FLAP - RH	1	SUPPLIED IN SET
4	733 21 06	MUD FLAP - REAR - RH	1	
5	909 01 22	HANDLE CHARGE PORT	1	
6	909 01 25	PLUG 15A, 3PIN 230V AC	1	
7	909 00 01	CHARGE PORT HANDLE ASSY (CHARGE CABLE)	1	
8	420 01 50	WHEEL COVER - LARGE	4	SUPPLIED IN SET

L =LEFT HAND DRIVE
R=RIGHT HAND DRIVE

6.20 CENTRAL DOOR LOCKING SYSTEM

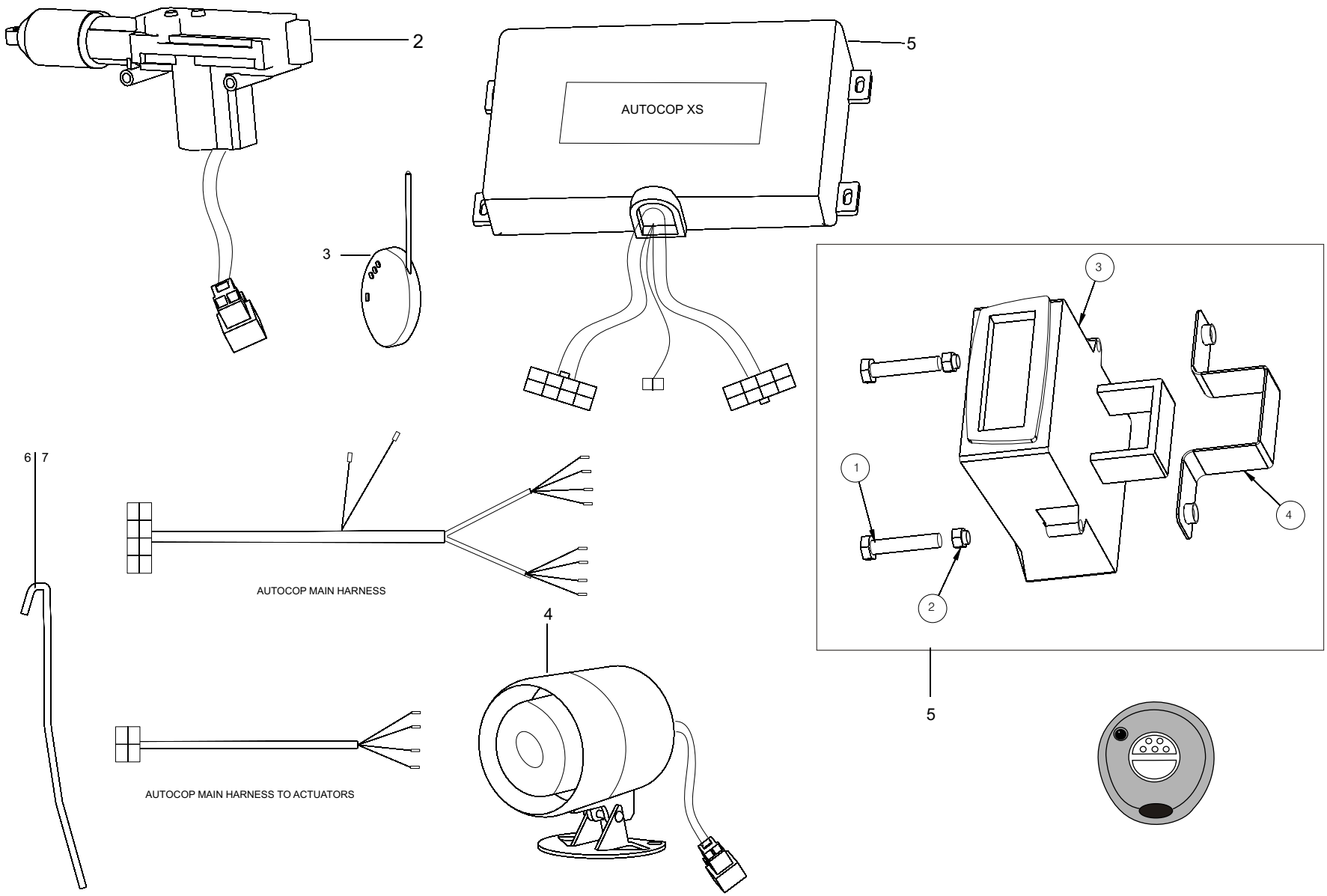

DESCRIPTION				REMARKS
KEY NO	PART NO	PART NAME	QTY	
1	872 00 01	CENTRAL DOOR LOCKING SYSTEM (AUTOCOP)	1	SUPPLIED AS ONE UNIT, PARTS NOT AVAILABLE SEPARATELY
2	872 01 10	ACTUATOR - CENTRAL DOOR LOCK	2	
3	872 01 13	REMOTE CONTROLLER - CDL - AUTOCOP	1	
4	872 00 03	SIREN ASSY - CDL - AUTOCOP	1	
5	872 00 04	CONTROLLER ASSY - CDL - AUTOCOP	1	
6	872 10 07	LINKAGE ASSY - CDL - LH	1	
7	872 20 07	LINKAGE ASSY - CDL - RH	1	
1	012-01-25	BOLT, HEX, M5 X 0.8 X 25	2	
2	032-01-04	NUT, NYLOCK, M4 x 0.7	2	
3	872-00-07	CONTROLLER ASSY-CDL-GEMINI	1	
4	872-00-30	WELDMENT BRKT-CONTROLLER MTG-CDL-GEMINI	1	
5	872-00-40	CENTRAL DOOR LOCKING UNIT (GEMINI # 7562.01)	1	

L =LEFT HAND DRIVE
R=RIGHT HAND DRIVE

6.30 ASSY STEREO SYSTEM

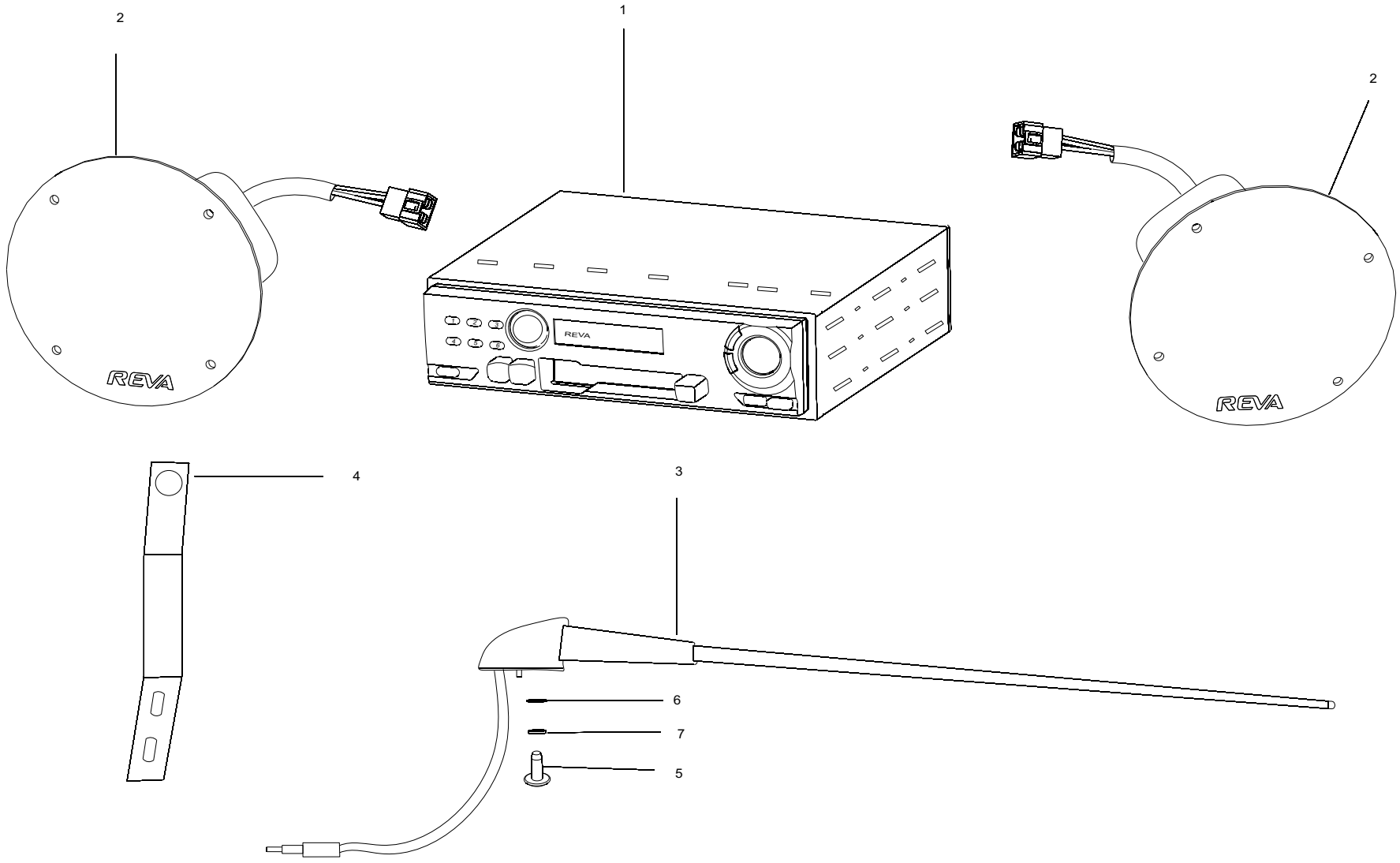

DESCRIPTION				REMARKS
KEY NO	PART NO	PART NAME	QTY	
1	970 00 71	STEREO ASSY- STANDARD	1	SUPPLIED AS ONE UNIT. PARTS NOT AVAILABLE SEPARATELY
1	970 00 85	STEREO ASSY- DELUX	1	
2	970 01 80	SPEAKER - 4" STANDARD	1	
2	970 01 83	SPEAKER - 4" DELUX	1	
3	970 00 60	ASSY ANTENNA - STEREO SYSTEM	1	
4	970 01 82	BRACKET STEREO MOUNTING	1	
5	006 01 20	SCREW M/C M6X1.0X20	1	TO MOUNT THE ANTENNA
6	021 01 06	WASHER FLAT M6	1	
7	022 01 06	WASHER LOCK M6	1	

L =LEFT HAND DRIVE
R=RIGHT HAND DRIVE

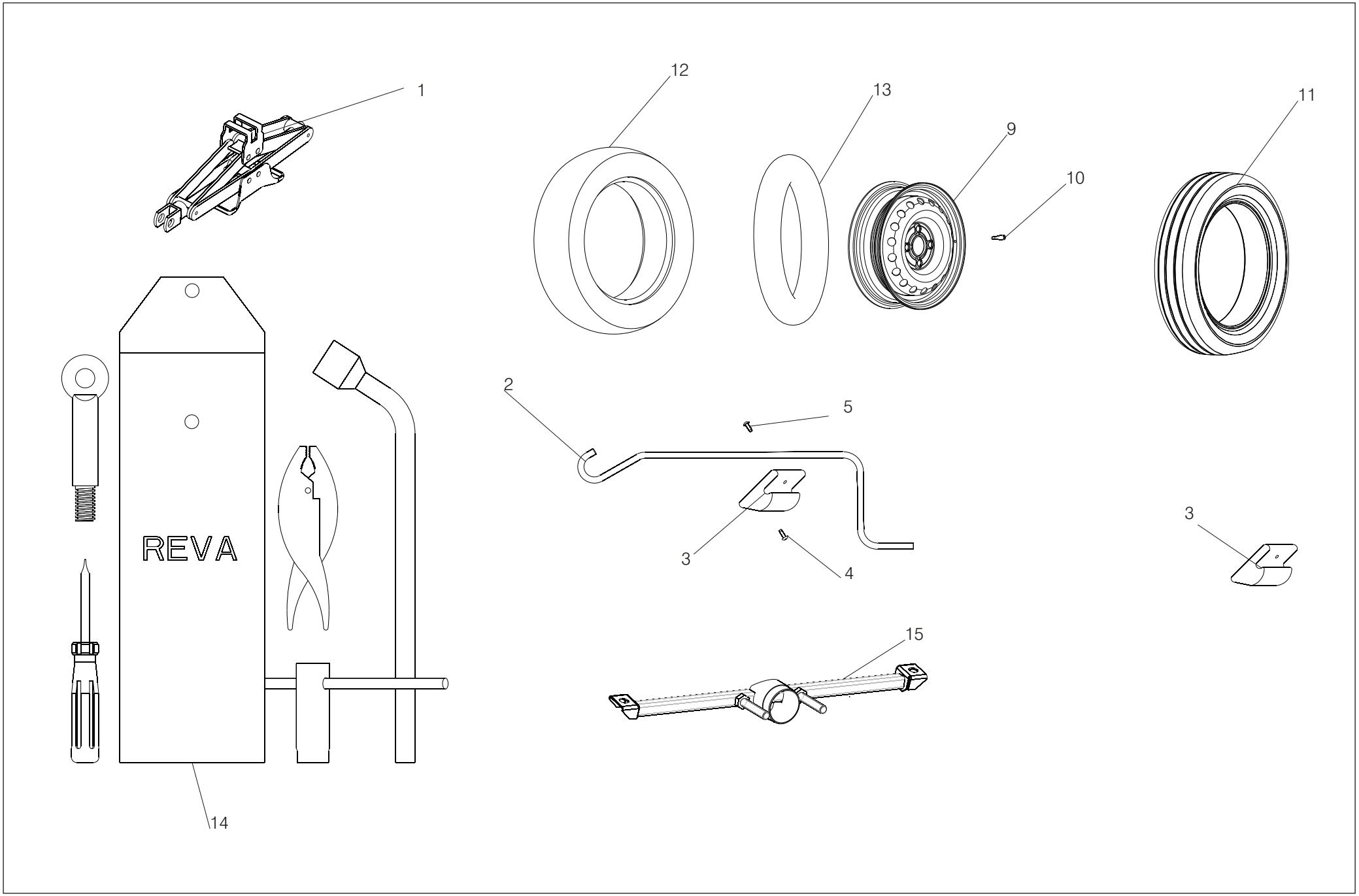
1
12
13
9
10
11
2
5
3
4
3
15
REVA
14

DESCRIPTION				REMARKS
KEY NO	PART NO	PART NAME	QTY	
1	751 01 01	JACK ASSY	1	
2	751 01 02	JACK HANDLE	1	
3	751 01 03	CLIP JACK HANDLE	1	
4	051 01 20	SCREW SELF TAP 4.2X19	1	
5	051 01 14	SCREW SELF TAP 4.2X13 PANHEAD	1	
6	015 01 25	BOLT HEX M10X1.5X25	2	TO MOUNT SPARE WHEEL ASSY TO CHASSIS
7	022 01 10 A	WASHER LOCK M10	2	TO MOUNT SPARE WHEEL ASSY TO CHASSIS
8	021 01 10 A	WASHER FLAT M10	2	TO MOUNT SPARE WHEEL ASSY TO CHASSIS
9	420 01 05 B	WHEEL RIM 13"- STEEL	5	
10	420 01 15	VALVE STEM Tubeless tyre	4	
11	420 01 11	TYRE, 13" Tubeless	4	
12	420 01 10	TYRE 13" (TUBE TYPE)	1	
13	420 01 13	WHEEL TUBE 13"	1	
14	752 00 00	TOOL KIT ASSY	1	
15	512 00 08	SPARE MOUNT WELDMENT	1	

L =LEFT HAND DRIVE
R=RIGHT HAND DRIVE

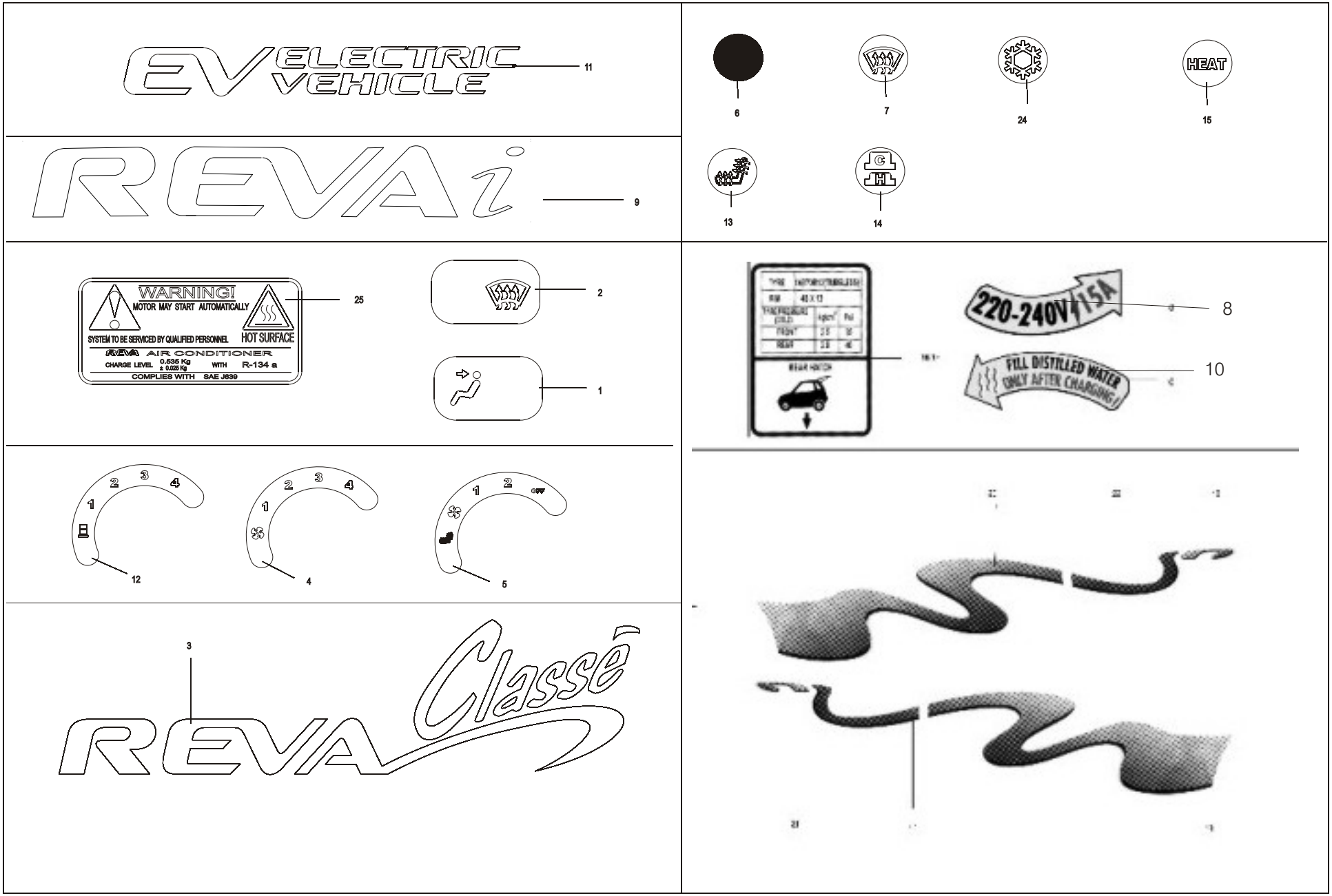
EV ELECTRIC VEHICLE
11
REVAi
9
6
7
24
HEAT
15
13
G
H
14
WARNING!
MOTOR MAY START AUTOMATICALLY
SYSTEM TO BE SERVICED BY QUALIFIED PERSONNEL
HOT SURFACE
REVA AIR CONDITIONER
CHARGE LEVEL 0.535 Kg ± 0.025 Kg WITH R-134 a
COMPLIES WITH SAE J639
25
2
1
220-240V 15A
8
FILL DISTILLED WATER ONLY AFTER CHARGING!
10
1 2 3 4
12
1 2 3 4
4
1 2 OFF
5
3
REVA Classé

DESCRIPTION			REMARKS
KEY NO	PART NO	PART NAME	QTY
1	886 01 12 A	DECAL - AIR BLOWER - SLIDING MECHANISM	1
2	886 01 11 A	DECAL - DEFROSTER - SLIDING MECHANISM	1
3	641 01 04	DECAL - REVA DELUX	1
4	886 01 07	DECAL - SWITCH BLOWER	1
5	863 01 27	DECAL - SWITCH CCS	1
6	886 01 19	DECAL SWITCH BLOWER - CENTER	1
7	886 01 18	DECAL SWITCH DEFROSTER CENTER	1
8	621 01 04	DECAL, POWER 240 V AC, 15 AMPS	1
9	650 01 02 A	DECAL, REVAi-FrontFender/Tail Panel	3
10	621 01 05	DECAL, WATER AFTER CHARGING	1
11	641 01 03	DECAL-EV ELECTRIC VEHICLE-TAIL LIGHT PANEL	1
12	886 01 15	DECAL-SWITCH - CCS	1
13	886 01 16	DECAL-SWITCH - CCS - CENTER	1
14	863 01 28	DECAL-SWITCH - CCS - CENTER	1
15	886 01 17	DECAL-SWITCH DEFROSTER CENTER	1
16	621 01 08	DECAL-TYRE DATA & RR HATCH REL-BLACK	1
17	621 01 09	DECAL-TYRE DATA & RR HATCH REL-SILVER	1
18	621 11 15	EXTERIOR DECAL - REAR QTR PANEL-LH	1
19	621 21 15	EXTERIOR DECAL - REAR QTR PANEL-RH	1
20	650 11 05	EXTERIOR DECAL FRONT FENDER-LH	1
21	650 21 05	EXTERIOR DECAL FRONT FENDER-RH	1
22	728 11 05	EXTERIOR DECAL DOOR OUTER-LH	1
23	728 21 05	EXTERIOR DECAL DOOR OUTER-RH	1
24	886 01 25	DECAL SWITCH- A/C CENTER	1
25	698 01 16	DECAL A/C WARNING INSTRUCTION	1

L =LEFT HAND DRIVE
R=RIGHT HAND DRIVE

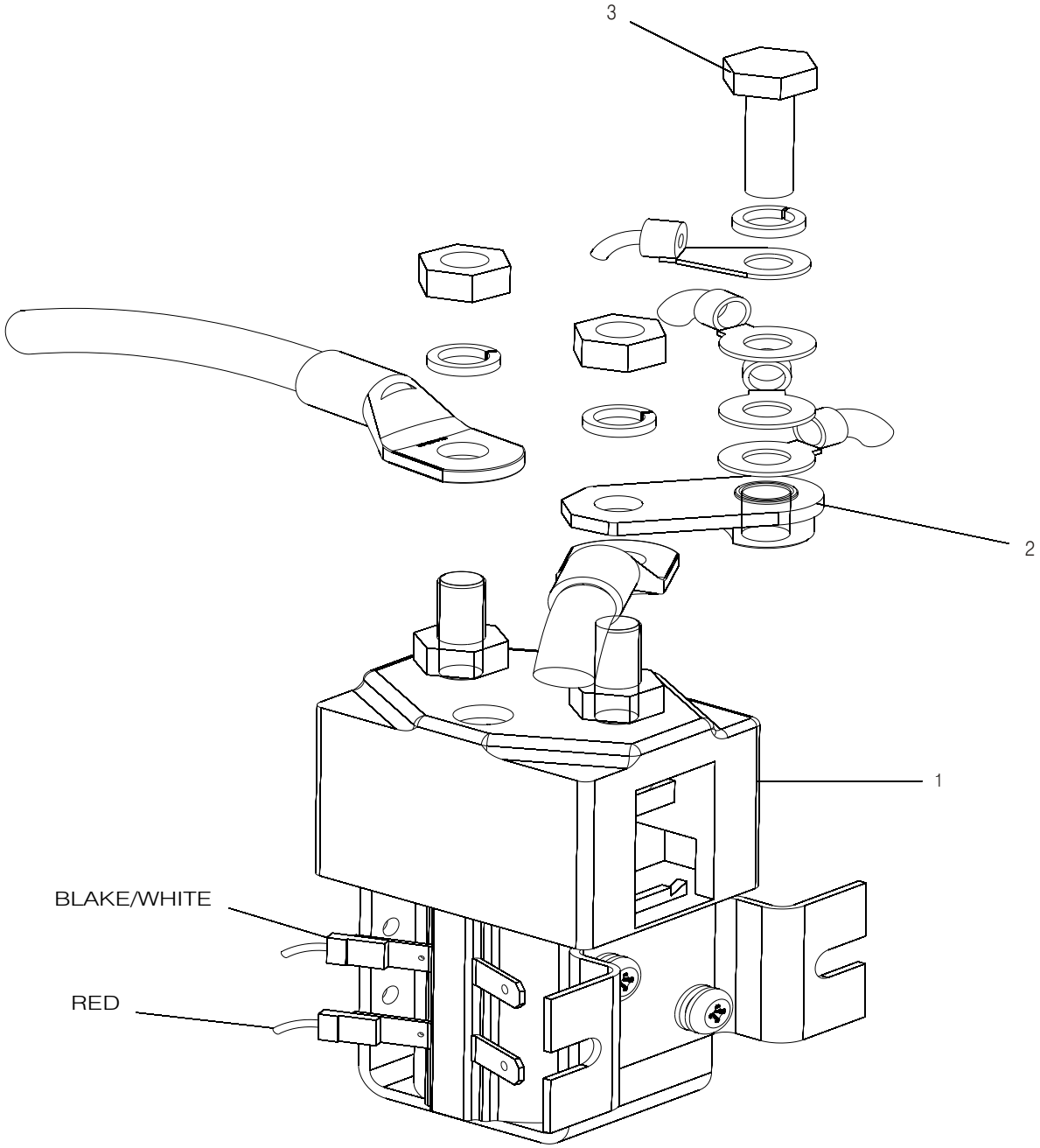
3
2
1
BLAKE/WHITE
RED

SL.NO..	PART NO		DESCRIPTION	QTY.	REMARKS
1	943-01-05		MAIN CONTACTOR (ALBRIGHT)	1	
2	9430126		LINK - MAIN CONTACTOR - EURO	1	
3	0140117		BOLT HEX M8 X 1.25X 16 NICKEL PLATED	1	

L =LEFT HAND DRIVE
R=RIGHT HAND DRIVE

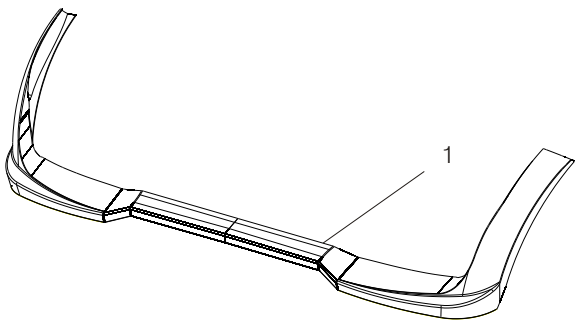

FRONT BUMPER SPOILER

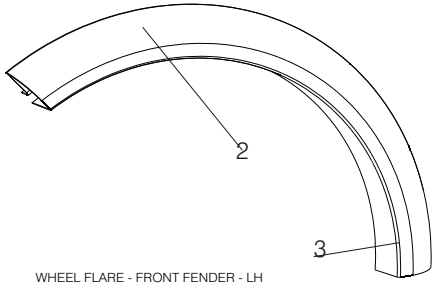

WHEEL FLARE - FRONT FENDER - LH

WHEEL FLARE - FRONT FENDER - RH IS THE MIRROR IMAGE OF THIS PART.

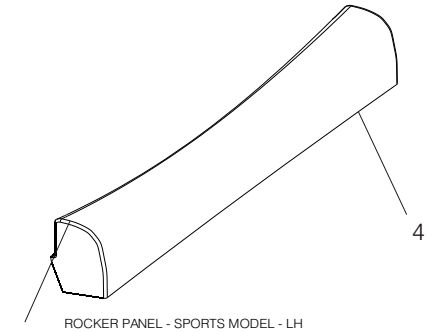

ROCKER PANEL - SPORTS MODEL - LH

ROCKER PANEL - SPORTS MODEL - RH IS THE MIRROR IMAGE OF THIS PART.

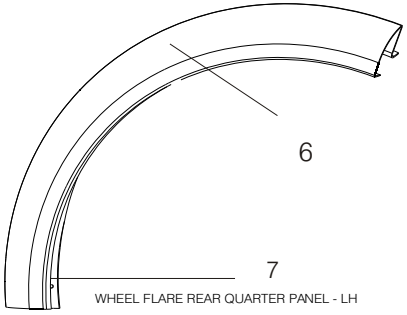

WHEEL FLARE REAR QUARTER PANEL - LH

WHEEL FLARE REAR QUARTER PANEL - RH IS THE MIRROR IMAGE OF THIS PART.

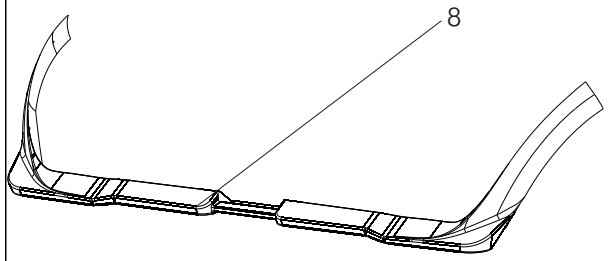

REAR BUMPER FLARE

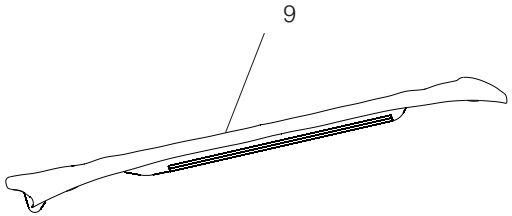

ROOF SPOILER - REAR HIGH MOUNT

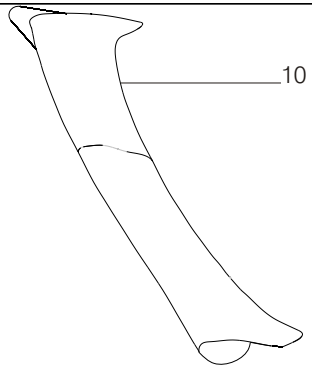

ROOF SPOILER - FRONT SUNSHIELD

BODY - KIT PARTS

DESCRIPTION				REMARKS
KEY NO	PART NO	PART NAME	QTY	
1	711 01 30	FRONT BUMPER SPOILER		
2	651 11 05	WHEEL FLARE - FRONT FENDER - LH		
3	651 21 05	WHEEL FLARE - FRONT FENDER - RH		
4	660 11 07	ROCKER PANEL - SPORTS MODEL - LH		
5	660 21 07	ROCKER PANEL - SPORTS MODEL - RH		
6	621 11 40	WHEEL FLARE REAR QUARTER PANEL - LH		
7	621 21 40	WHEEL FLARE REAR QUARTER PANEL - RH		
8	712 01 30	REAR BUMPER FLARE		
9	610 00 09	ROOF SPOILER - REAR HIGH MOUNT		
10	610 01 08	ROOF SPOILER - FRONT SUNSHIELD		

L =LEFT HAND DRIVE
R=RIGHT HAND DRIVE

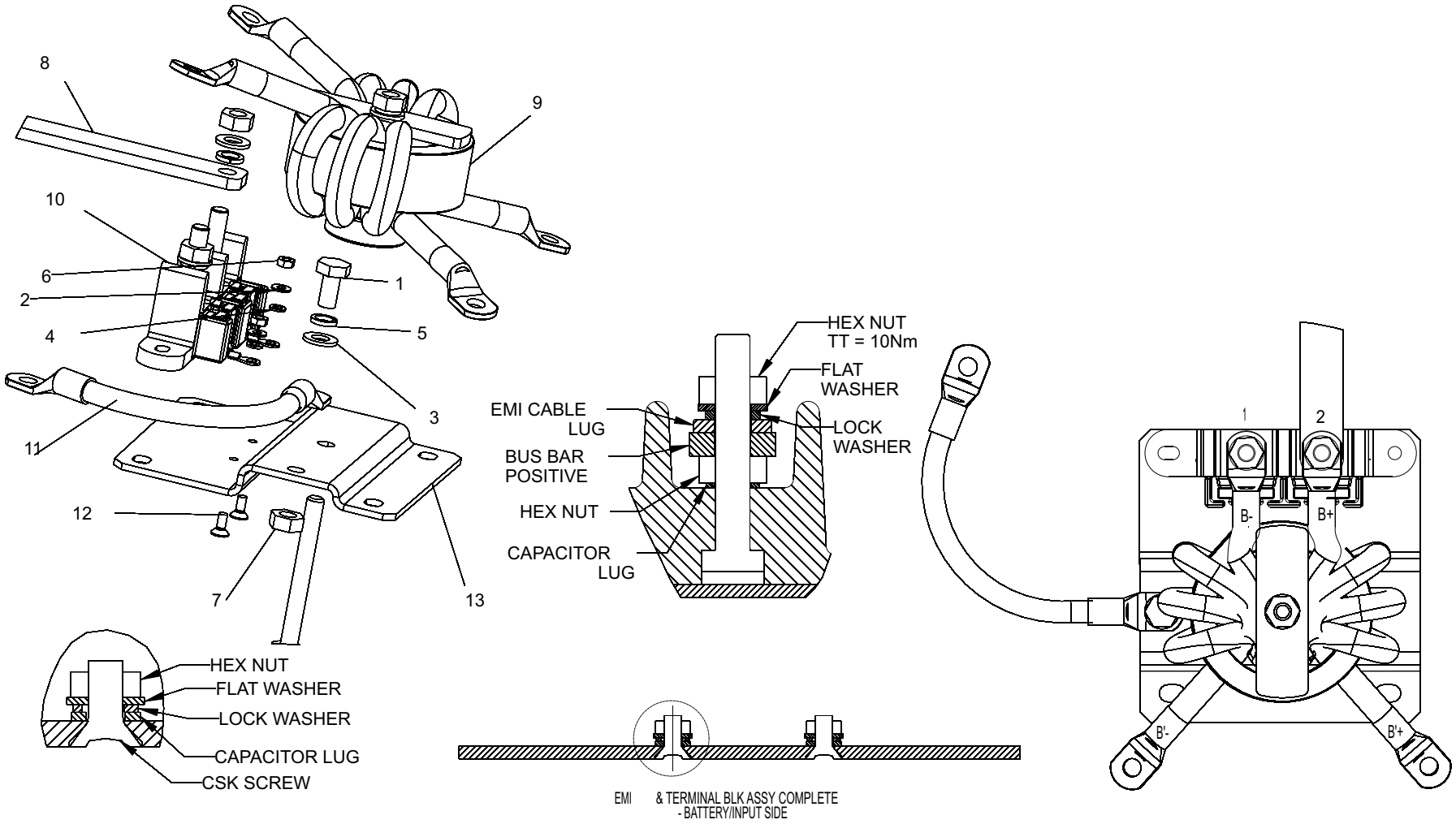

EMI & TERMINAL BLK ASSY COMPLETE
- BATTERY/INPUT SIDE

DA-00-1265

SL.NO..	PART NO	REV	DESCRIPTION	QTY.	REMARKS
1	014-01-17		BOLT,HEX,M8 X 1.25 X 16	1	
2	021-01-04	E	WASHER FLAT, M4	2	
3	021-01-08	D	WASHER, FLAT, M8	1	
4	022-01-04	C	WASHER, LOCK, M4	2	
5	022-01-08		WASHER, LOCK, M8	1	
6	031-01-04	E	NUT HEX. M4x0.7	2	
7	031-01-08		NUT, HEX, M8 X 1.25	1	
8	938-01-20	C	BUS BAR POSITIVE	1	
9	DA-00-1017	B	EMI CORE ASSY-BATTERY/INPUT SIDE	1	
10	DA-00-965	A	TERMINAL BLOCK-BATTERY SIDE	1	
11	DA-01-1183	OR	EMI - GROUNDING CABLE MAIN	1	
12	DA-01-1266	OR	SCREW MACHINE M4X0.7 CSK-IS 7485	2	
13	DA-01-972	C	MTG PLATE - TERMINAL BLOCK - BATTERY SIDE	1	

L =LEFT HAND DRIVE
R=RIGHT HAND DRIVE

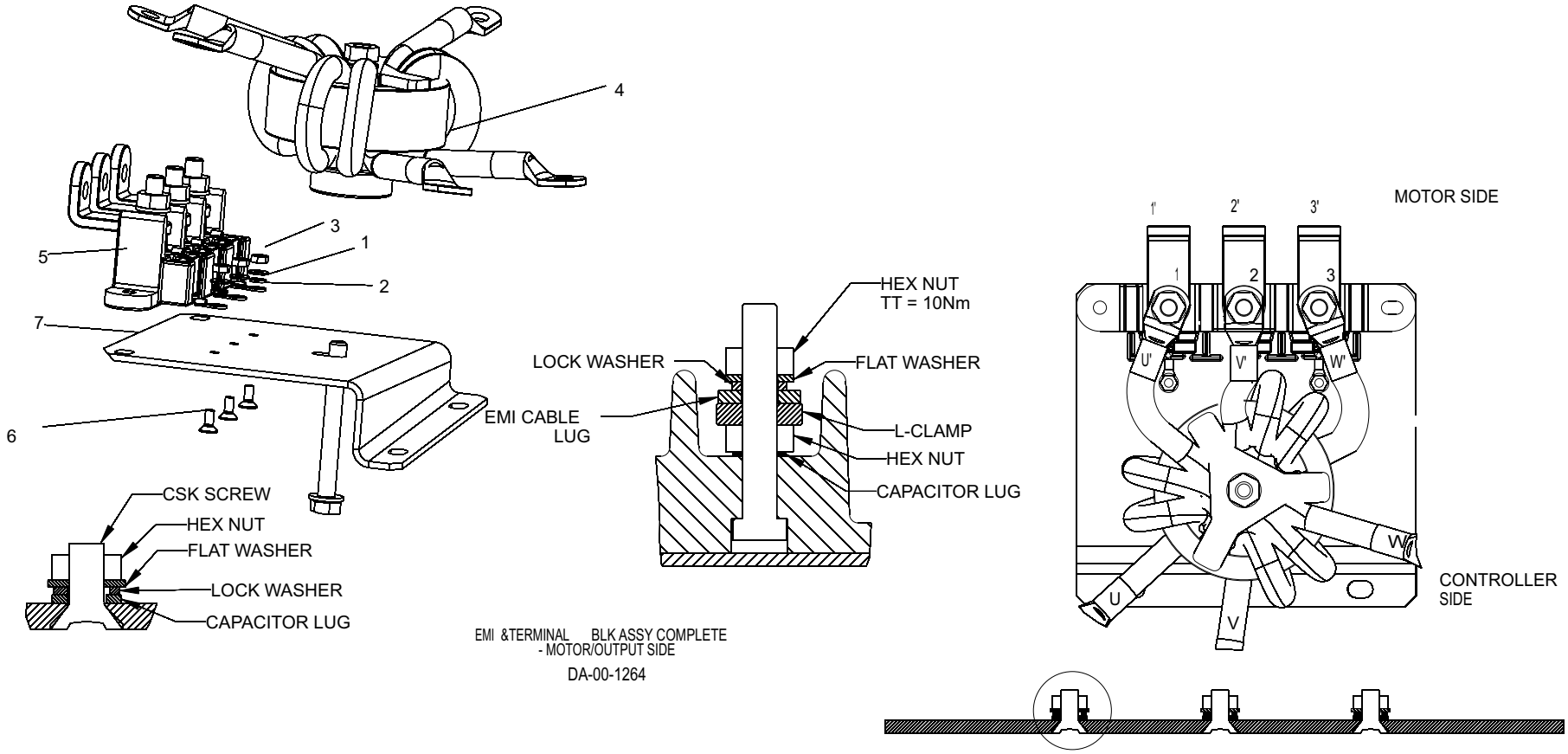

EMI &TERMINAL BLK ASSY COMPLETE
- MOTOR/OUTPUT SIDE

DA-00-1264

6.90 OUTPUT EMI

SL.NO..	PART NO	REV	DESCRIPTION	QTY.	REMARKS
1	021-01-04	E	WASHER FLAT, M4	3	
2	022-01-04	C	WASHER, LOCK, M4	3	
3	031-01-04	E	NUT HEX. M4x0.7	3	
4	DA-00-1015	B	EMI CORE ASSY-MOTOR-OUTPUT SIDE	1	
5	DA-00-940	A	TERMINAL BLOCK MOTOR SIDE	1	
6	DA-01-1266	OR	SCREW MACHINE M4X0.7 CSK-IS 7485	3	
7	DA-01-970	C	MOUNTING PLATE-TER-BLK-MOTORSIDE	1	

L =LEFT HAND DRIVE
R=RIGHT HAND DRIVE

REVA ELECTRIC CAR COMPANY
122e, Bommasandra Indl. Area
Bommasandra, Bangalore - 562 158
INDIA.

© 2008
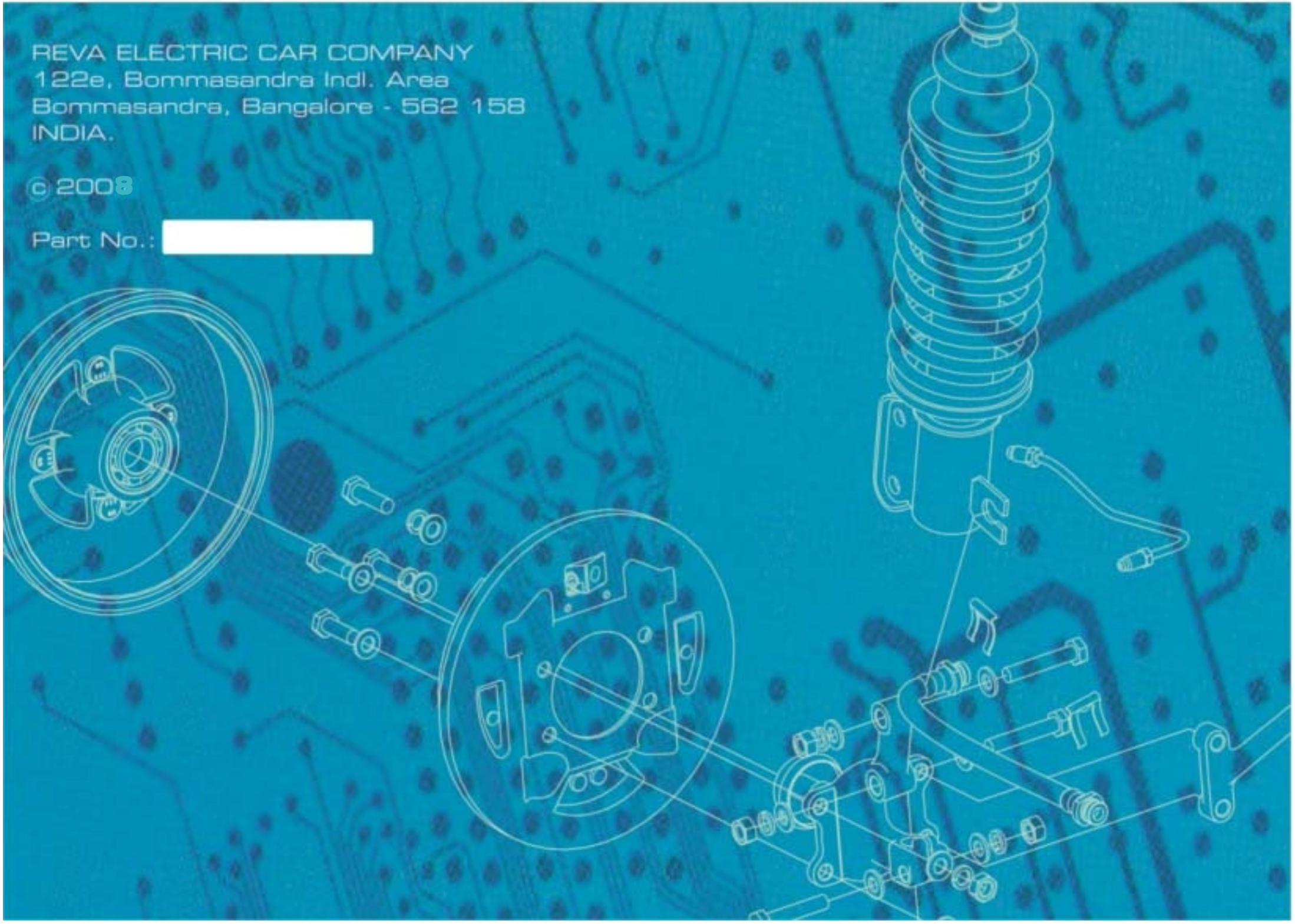
Part No.: